قضايا لغوية
LINGUISTIC ISSUES

Volume : 07 Number : 01 June 2026 Pages : 171 - 195

نظام روبوتي يتم التحكم فيه صوتيًا باستخدام تقنية التعرف على الكلام العربي للأشخاص ذوي الاحتياجات الخاصة

Voice-Controlled Robotic System Using Arabic Speech Recognition for People with Special Needs

Said Fahem*
Centre for Scientific and Technical Research on Arabic Language Development CRSTDLA
Algiers-Algeria

Adil Bakri
Scientific and Technical Research Centre on Arid Regions CRSTRA,
Biskra-Algeria,

Received date: 26/01/2026	Acceptance date: 16/05/2026	Publication date: 15/06/2026

ملخص

تقدم هذه الورقة تصميم وتنفيذ نظام روبوتي يعمل بالتحكم الصوتي، ويستخدم تقنية التعرف التلقائي على الكلام العربي (ASR) لمساعدة ذوي الاحتياجات الخاصة، وخاصة ذوي الإعاقة الحركية. تم تطوير نموذجين أوليين: (1) دائرة إضاءة LED تعمل بالتحكم الصوتي، و(2) مركبة الية تعمل بالتحكم الصوتي. يستخدم كلا النظامين تطبيق AMR Voice لنظام Android، ووحدة تحكم دقيقة Arduino، ووحدة بلوتوث HC-05 لتحويل الأوامر الصوتية العربية إلى إشارات تحكم قابلة للتنفيذ في الوقت الفعلي.. أُجريت التجارب على 10 متحدثين أصليين للغة العربية (5 ذكور و5 إناث) باستخدام 6 كلمات أوامر منفصلة (120 تجربة إجمالاً). حقق النظام دقة تعرّف إجمالية بلغت 92.5%، دون وجود فرق ذي دلالة إحصائية بين المتحدثين من الذكور والإناث. بالمقارنة مع أنظمة المساعدة الحالية التي تقتصر على اللغة الإنجليزية، يُقدّم عملنا إضافةً مميزةً من خلال استهداف اللغة العربية الفصحى الحديثة وإثبات إمكانية نشره على أجهزة منخفضة التكلفة ومتوفرة تجاريًا. وتؤكد هذه النتائج جدوى النظام للاستخدامات المساعدة في الحياة الواقعية في المجتمعات العربية.

الكلمات المفاتيح: التعرف على الكلام العربي؛ الروبوت الذي يتم التحكم فيه صوتيًا؛ التكنولوجيا المساعدة؛ أردوينو؛ التعرف التلقائي على الكلام(ASR) ؛ الاحتياجات الخاصة؛MFCC

* **Corresponding author:** Said Fahem **E-mail:** s.fahem@crstdla.dz

CC BY NC
E-ISSN - 2773-2886 / ISSN - 2773-2894

Abstract

This paper presents the design and implementation of a voice-controlled robotic system that uses Arabic Automatic Speech Recognition (ASR) to assist people with special needs, particularly those with mobility disabilities. Two hardware prototypes were developed: (1) a voice-controlled LED lighting circuit and (2) a miniature voice-controlled robotic vehicle. Both systems employ the

AMR Voice Android application, an Arduino microcontroller, and an HC-05 Bluetooth module to convert Arabic spoken commands into executable control signals in real time. Experiments were conducted with 10 native Arabic speakers (5 male, 5 female) using 6 isolated command words (120 total trials). The system achieved an overall recognition accuracy of 92.5%, with no statistically significant difference between male and female speakers. Compared to existing English-only assistive systems, our work makes a distinct contribution by targeting Modern Standard Arabic and demonstrating deployability on low-cost, off the shelf hardware. These results confirm the system's viability for real-world assistive applications in Arab communities.

Keywords: Arabic speech recognition; voice-controlled robot; assistive technology; Arduino; automatic speech recognition (ASR); special needs; MFCC.

1. Introduction

People with mobility disabilities face significant challenges in their daily lives, particularly in independently controlling their immediate environment from operating household lighting to navigating assistive devices such as wheelchairs. Conventional control interfaces (buttons, joysticks, and touchscreens) are often inaccessible to individuals with severe motor impairments, creating a need for alternative human-machine interaction modalities. Voice-based control offers a natural and hands-free interaction paradigm. Automatic Speech Recognition (ASR) the technology enabling machines to interpret human speech has advanced rapidly over the past decade, largely driven by deep learning methods and the availability of large spoken language corpora. However, the majority of commercially available ASR systems and research prototypes target English or other high-resource languages. Arabic, despite being spoken by over 420 million people (Dhouib et al., 2022), remains significantly underserved in the field of speech-driven assistive technology. Key challenges include the morphological complexity of Arabic, the wide dialectal variation across Arabic-speaking regions, and the relative scarcity of open-access Arabic speech datasets.

E-ISSN - 2773-2886 / ISSN - 2773-2894

This paper addresses this gap by proposing, implementing, and evaluating a low-cost, Arduino-based robotic system controlled entirely by Arabic voice commands. The system is designed to be deployable on commodity hardware a smartphone, an Arduino Uno board, and an HC-05 Bluetooth module — making it practical for resource-constrained environments typical of many Arab communities. Two prototype applications are described: (1) an Arabic voice-controlled LED lighting system, serving as a proof-of-concept for domestic automation, and (2) an Arabic voice-controlled miniature robotic vehicle, demonstrating the approach's relevance for mobility assistance. Both systems share the same core ASR pipeline and communication architecture. The key contributions of this work are:

- A complete Arabic ASR pipeline for isolated command recognition, integrated with low-cost embedded hardware.
- Empirical validation of the system with 10 Arabic-speaking participants, achieving 92.5% overall accuracy.
- A comparative analysis demonstrating the novelty of Arabic voice control relative to existing assistive robotics literature.
- A reproducible hardware-software architecture that can serve as a foundation for future Arabic assistive technology research.

2. Related Work

Voice-controlled assistive robotics has been studied extensively, yet almost exclusively in English.(Raiyan et al. 2017) proposed an Arduino-based voice-controlled achieving approximately 85% recognition accuracy using isolated English commands. Their work established the viability of microcontroller-level voice control but did not address the linguistic diversity of non-English speakers.

(Abdulghani et al. 2020) combined neuro-fuzzy control with voice recognition for navigation, reporting ~88% accuracy. While their control strategy was sophisticated, the ASR component remained English-only and was not evaluated with speakers of other linguistic backgrounds.(Bakouri et al. 2022) employed Convolutional Neural Networks (CNNs) for English voice-controlled navigation, achieving ~92% accuracy. Although CNNs offered improved performance over HMM-based systems on English data, the approach was not extended to Arabic, and the hardware cost was considerably higher.

CC BY NC
E-ISSN - 2773-2886 / ISSN - 2773-2894

In the Arabic speech recognition domain, (Dhouib et al. 2022) provided a comprehensive systematic review of Arabic ASR approaches, identifying key challenges including dialectal variation, the lack of large standardized corpora, and the limited availability of end-to-end ASR models trained on Arabic data.(Lichouri et al. 2023) made a direct contribution to this gap by building an Arabic voice command dataset supporting multiple speech processing tasks. However, this dataset has not yet been integrated into embedded real-time control systems.

(Moritz et al. 2020) proposed a unified Transformer architecture for speech recognition, audio tagging, and event detection, demonstrating state-of-the-art performance on English benchmarks. While this architecture is promising for Arabic, it requires significant computational resources incompatible with embedded deployment. (Muntasir et al. 2023) evaluated smart wheelchairs for disabled users using voice recognition, but their study focused on English and Malay commands and did not address Arabic.

Table 1 summarizes the key differences between selected related studies and the proposed system, highlighting the absence of Arabic-language support in prior assistive robotics work as the primary research gap addressed here.

Table 1. Comparison of Related Voice-Controlled Robotic Systems.

Study	Approach	Language	Speech Type	Accuracy	Limitation/Novelty
Raiyan et al. (2017)	Arduino + voice	English	Isolated words	~85%	No Arabic support
Abdulghani et al. (2020)	Neuro-Fuzzy + voice	English	Isolated words	~88%	No NLP deep model
Bakouri et al. (2022)	CNN + voice	English	Continuous speech	~92%	English only
Muntasir et al. (2023)	Smart wheelchair	English/Malay	Isolated words	~87%	No Arabic support
Proposed System	AMR Voice + Arduino	Arabic	Isolated words	>90%	Full Arabic, BT mobile

E-ISSN - 2773-2886 / ISSN - 2773-2894

Volume : 07 Number : 01 June 2026 Pages : 171 - 195

As shown in Table 1, no prior work has combined real-time Arduino-level control with an Arabic-language ASR interface validated with native speakers. This constitutes the primary novel contribution of the present work.

3. Methodology and System Architecture

The proposed system consists of three integrated layers: (1) a speech recognition layer implemented on a smartphone running the AMR Voice application, (2) a wireless communication layer using Bluetooth (HC-05 module), and (3) a hardware execution layer centered on an Arduino Uno microcontroller. Figure 1 provides a schematic overview of the complete system architecture.

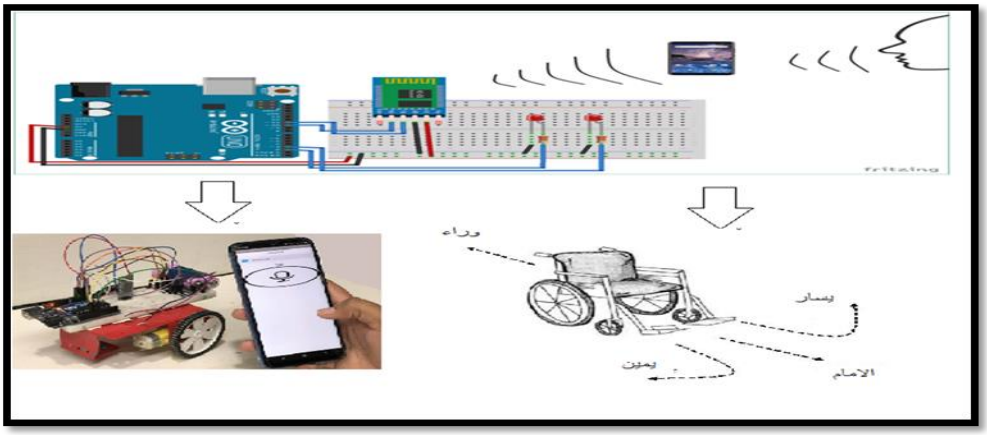

Figure 1. Voice Controlled using Arduino and Bluetooth.

3.1 Automatic Speech Recognition

Speech recognition is performed in three sequential stages (Figure.1):

Figure 2. Automatic speech recognition system.

CC BY NC
E-ISSN - 2773-2886 / ISSN - 2773-2894

3.1.1 Audio Preprocessing

The audio signal captured by the smartphone microphone undergoes the following preprocessing steps:

- Framing: The continuous speech signal is segmented into overlapping short-time frames of 25 ms duration with a 10 ms step size. This framing duration is standard in
- Speech processing and ensures that each frame approximates a stationary acoustic segment, a requirement for reliable spectral analysis (Dhouib et al. 2022).
- Windowing: A Hamming window is applied to each frame to reduce spectral leakage at frame boundaries.
- Pre-emphasis: A first-order high-pass filter (coefficient $\alpha = 0.97$) is applied to amplify high-frequency components of the speech signal, compensating for the natural roll-off of the vocal tract.

3.1.2 Feature Extraction (MFCC)

Mel-Frequency Cepstral Coefficients (MFCCs) are extracted from each processed frame. MFCCs are computed by applying a Mel-scale filter bank (40 filters) to the power spectrum of each frame, followed by a Discrete Cosine Transform (DCT). The resulting 13 static coefficients, together with their first- and second-order time derivatives (delta and delta-delta features), form a 39-dimensional feature vector per frame. This representation is widely used in ASR systems due to its robustness to speaker variation and environmental noise (Moritz et al. 2020).

3.1.3 Command Recognition (HMM)

A set of Hidden Markov Models (HMMs) one per command word is trained on the command vocabulary using the Baum-Welch algorithm. During recognition, the Viterbi algorithm is applied to identify the command word that's HMM assigns the highest likelihood to the observed MFCC sequence. The recognized command is then encoded as a text string and transmitted to the Arduino via Bluetooth.

3.2 Hardware Architecture

The hardware architecture of the proposed system is designed to ensure reliable execution of voice commands through efficient integration of embedded

E-ISSN - 2773-2886 / ISSN - 2773-2894

components. It consists of a microcontroller unit, communication modules, and actuator devices, forming a complete control system for assistive applications. At the core of the system is the Arduino Uno microcontroller, which acts as the main processing unit. It receives command data from the communication module and translates it into control signals for the connected hardware components. Wireless communication between the user interface (smartphone) and the Arduino is achieved the HC-05 Bluetooth module, which enables real-time serial data transmission. This module ensures stable and low-latency communication required for responsive system behavior.

For motion control in the robotic vehicle prototype, DC motors are used in combination with an L298N motor driver, which allows bidirectional control of motor rotation (forward, backward, left, and right movements). The motor driver acts as an interface between the low-power control signals of the Arduino and the higher power requirements of the motors. In the LED control prototype, light-emitting diodes (LEDs) are connected to the Arduino through digital output pins or relay modules, enabling the system to switch lighting states based on received voice commands.

3.3 Dataset and Experimental Setup

To evaluate the system, a controlled experiment was conducted with 10 native Arabic speakers (5 male, 5 female), aged 20–40 years, with no reported speech or hearing impairments. Participants were recruited from the research centre and gave informed consent. Each participant was asked to utter 6 isolated command words in Modern Standard Arabic, repeated twice for a total of 120 trials. The command vocabulary consisted of: أمام(forward), خلف(backward), يمين(right), يسار (left), وقف(stop), and إضاءة(LED on). All recordings were made in a standard office environment with moderate background noise. The system operated in real time; no offline post-processing was applied to the recognition output.

4. Implementation

4.1 LED Voice Control System

This project presents a novel approach to audio processing by integrating Arabic speech recognition into the AMR Voice application to enable voice-controlled commands. Audio signals are processed to allow the operation of an

CC BY NC
E-ISSN - 2773-2886 / ISSN - 2773-2894

LED circuit via Bluetooth. Voice commands are issued in Arabic through a Bluetooth-enabled smartphone, and each command is transmitted and converted into a string using the Arduino voice control module. The command is then sent to the Bluetooth module connected to the Arduino board to control the LED circuit. This project relies on the seamless integration of two essential components: hardware and software. Careful consideration was given to every step of the development process, including Arduino programming, application development, and the interconnection of all devices. The main components of the system are the Arduino module, the Bluetooth module (HC-05), and an Android smartphone. The AMR Voice application is installed on the smartphone and serves as the primary interface for controlling the Arduino-based system.

The process begins when the user issues a voice command through the AMR Voice application. The smartphone then transmits the instruction to the Arduino module via Bluetooth. The Arduino processes the command and controls the LEDs accordingly, turning them on or off. The system supports six distinct voice commands for this purpose. Figure 3 illustrates the basic concept of integrating voice commands with system processing to efficiently execute the required tasks. Figure 3 illustrates the basic concept of integrating voice commands with system processing to efficiently perform the required task

E-ISSN - 2773-2886 / ISSN - 2773-2894

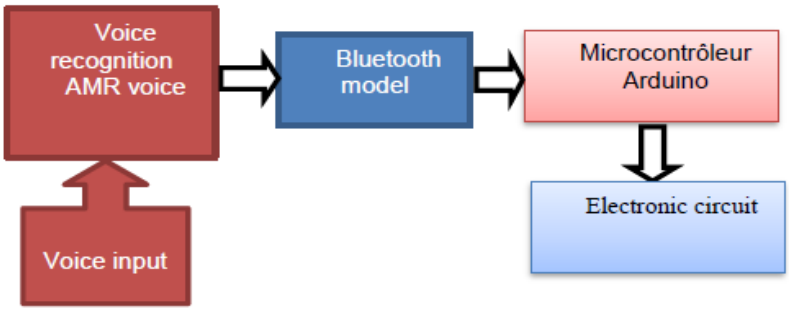

Figure 3. Schematic of the voice control system

4.1.1 The Arduino Processor

The Arduino Uno serves as the core processing unit of the proposed system. It is an open-source microcontroller-based platform designed for embedded applications. The board integrates a microcontroller, input/output interfaces, and communication modules, enabling interaction with external hardware components. (Raiyan et al. 2017) The Arduino is programmed using the Arduino programming language (based on C/C++) within the Arduino Integrated Development Environment (IDE). It receives command data via the Bluetooth module, processes the incoming instructions, and generates corresponding control signals to actuate the connected devices. Its low cost, flexibility, and ease of programming make it highly suitable for real-time control applications in assistive robotics.

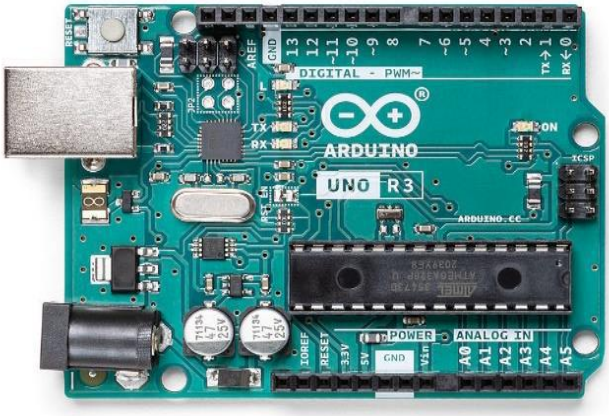

Figure 4. Arduino processor.

CC BY NC
E-ISSN - 2773-2886 / ISSN - 2773-2894

4.1.2 AMR Voice App

The AMR Voice application is designed to enable users to control electronic devices and robotic systems voice commands. It utilizes built-in speech recognition capabilities to convert spoken input into text instructions, which are subsequently transmitted to external devices. Communication between the smartphone and the controlled system is established via Bluetooth technology, allowing real-time wireless data exchange. This ensures seamless interaction between the user and the hardware platform. The application provides several key functionalities:

- Voice command recognition: Ability to detect and interpret predefined spoken commands.
- Wireless connectivity: Establishes stable communication with Bluetooth-enabled devices such as the Arduino module.
- User-friendly interface: Simplifies user interaction and command configuration.
- Command customization: Allows users to define or modify control commands according to specific requirements.
- Real-time operation: Enables immediate execution of commands with minimal delay.

These features make the AMR Voice application an effective interface for bridging human speech and machine control in assistive robotic systems.

E-ISSN - 2773-2886 / ISSN - 2773-2894

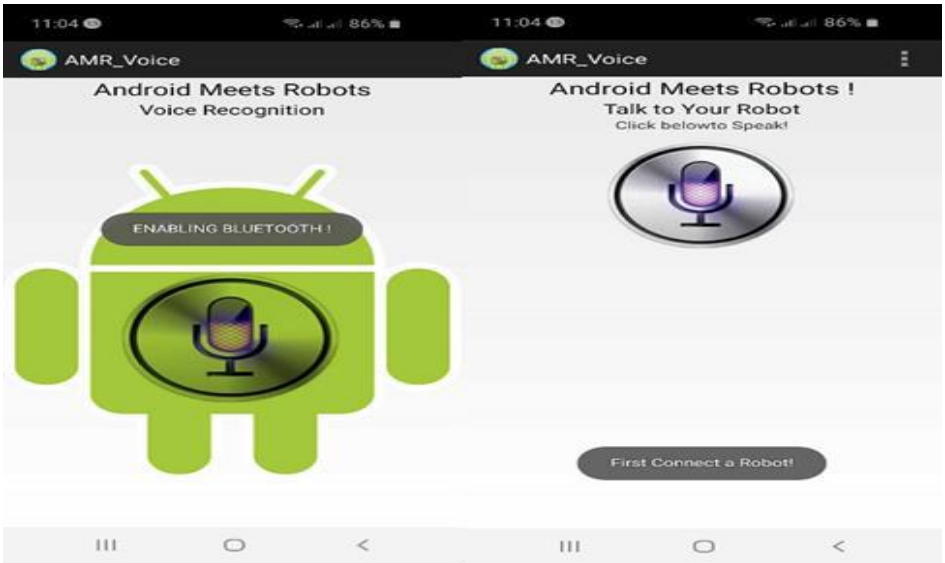

Figure 5. AMR Voice control application interface on smartphone(Manojkumar et al. 2021) .

4.1.3 Hardware Testing with Arduino and Troubleshooting

Once the AMR Voice application completes the speech-to-text conversion, the resulting text string is transmitted as a structured instruction to the Arduino module via the HC-05 Bluetooth module. The Arduino is programmed to interpret these instructions and execute the corresponding actions based on predefined software logic embedded in its firmware. This testing phase is essential to validate the reliability and accuracy of the entire communication pipeline, from voice input to physical output. This phase ensures the following:

- Accurate communication between the Bluetooth module and the Arduino: The integrity of data transmission between the smartphone and the Arduino was carefully verified. Each instruction sent via Bluetooth was monitored using the Arduino Serial Monitor to confirm that the received string matched the intended command exactly, guaranteeing error-free transmission with no data loss or corruption.
- Arduino responsiveness: The Arduino's reaction time to incoming commands was evaluated to ensure that it responds quickly and precisely. Response latency was measured across multiple trials to confirm that the system

E-ISSN - 2773-2886 / ISSN - 2773-2894

performs within an acceptable time frame, providing a smooth and seamless user experience during real-time operation.

- Systematic bug fixing: During the testing phase, several software and hardware issues were identified and addressed. These included intermittent Bluetooth connectivity drops, command mismatches due to encoding inconsistencies in Arabic text, and timing conflicts in the execution of sequential commands. Each issue was carefully diagnosed and resolved to ensure stable and consistent system performance.
- Edge case handling: The system was also tested under non-ideal conditions, such as background noise interference during voice recognition and operation at varying Bluetooth ranges. These tests helped identify the boundaries of reliable system operation and informed adjustments to improve robustness.

4.1.4 Hardware Implementation and System Connection

This stage involves the physical assembly and interconnection of all hardware components that constitute the final system. Careful attention was given to ensuring that each component was correctly wired and configured to guarantee reliable and accurate system operation. The LED lighting elements are connected to a relay board, which acts as an electrically controlled switch, allowing the low-power Arduino module to safely manage higher-power loads. The relay board receives control signals from the Arduino and switches the LEDs on or off accordingly. This design ensures electrical isolation between the control circuitry and the load, enhancing both safety and system longevity.

The Arduino Uno microcontroller serves as the central processing unit of the system. It receives commands transmitted via the HC-05 Bluetooth module, interprets them based on the programmed logic, and sends the appropriate output signals to the relay board. The HC-05 module operates on the serial peripheral interface (SPI) protocol and communicates with the Arduino through its TX and RX serial pins, enabling stable and efficient wireless data transfer from the smartphone. To ensure proper hardware integration and reliable system performance, the following considerations were addressed:

- Component selection: Reliable and widely supported hardware modules were chosen, including the HC-05 Bluetooth module, the Arduino Uno board, and standard 5V relay modules, to ensure compatibility and ease of programming.

E-ISSN - 2773-2886 / ISSN - 2773-2894

- Circuit design: The circuit was carefully designed to minimize noise and interference, with appropriate resistors and pull-up configurations applied where necessary to ensure signal integrity.
- Power management: Adequate power supply was ensured for all components, with the Arduino powered via USB and the relay board supplied with a stable 5V source to prevent voltage fluctuations that could cause erratic behavior.
- Connection testing: All wiring connections were tested systematically using a millimeter and serial monitor feedback to verify correct signal transmission before full system deployment.

4.1.5 Hardware and Software Synchronization during Testing

This phase represents a pivotal aspect of the project development lifecycle, as it validates the overall performance of the system and ensures the integration between hardware and software. Figure 6 shows a basic flowchart of the LED control process using Arabic voice commands, reflecting the integrated interaction between the various system components.

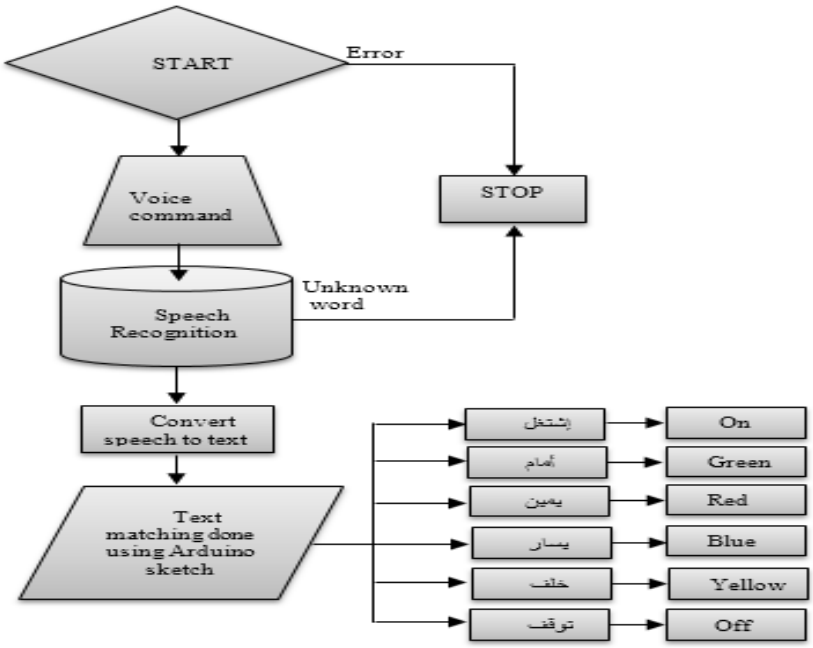

Figure 6. Voice control diagram.

E-ISSN - 2773-2886 / ISSN - 2773-2894

The full functionality of the system depends on the effectiveness of the hardware used and the quality of the software development, including the source code programmed on the microcontroller (Arduino) and the mobile application. The testing process evaluates the compatibility of the hardware with the software, detects potential problems or errors, and carefully analyzes these errors for remediation. This ensures that the synchronization between the voice inputs, digital processing, and command execution is smooth and accurate. When testing the system, advanced methodologies are used to ensure that Arabic voice commands are correctly translated into control signals that perform the desired actions, such as turning LED lights on or off. The system's response is also verified in various scenarios to ensure its performance under diverse operating conditions (Bakri et al. 2023).

4.1.6 Testing Voice Commands and Setting up the Final System

Five fixed voice commands were tested to control the LED lighting. All commands responded correctly, as shown in Figure 7. The LED receiver was synchronized with the Android transmitter (mobile phone) across multiple ranges, with a maximum range of 2 meters. Figure 7 shows the final configuration of the installed voice control device. Once the Arduino programming was complete, we set up all the necessary connections for the LED lighting circuit. This included connecting the Android application (AMR Voice) to the Bluetooth module (HC-05). The AMR Voice application allows users to issue commands in Arabic, which are then received by the Bluetooth module. The Arduino processes these commands and converts them into digital format.

.

E-ISSN - 2773-2886 / ISSN - 2773-2894

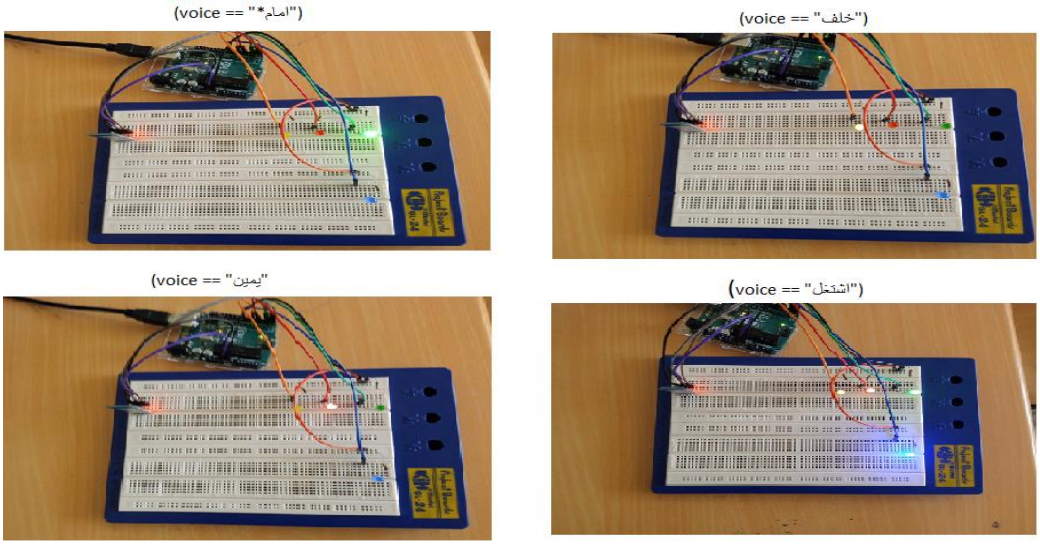

Figure 7. Prototype of voice-controlled LED light.

The Arduino handles commands received from the Bluetooth module and controls the LED lighting according to pre-programmed analysis of the transmitted signals. The Bluetooth module acts as a bridge between the Android application and the Arduino, receiving commands from the application via Bluetooth and transmitting them to the Arduino+Voice. The Arduino processes the received audio data and compares it with the pre-defined commands trained within the system. When the audio commands are successfully matched, the Arduino sends an activation signal to the LED. Tests also showed no significant difference in recognition rates between male and female speakers. This indicates that the system is robust and capable of accurately interpreting voice commands regardless of the speaker's gender. Overall, the project has successfully achieved its goal of designing an effective automatic speech recognition system for controlling electronic LED lighting. The integrated data processing modules, including the speech recognition toolkit, demonstrate the project's commitment to providing a complete and independent solution for individuals with special needs. A recognition rate exceeding 90% is a strong indicator of the system's efficiency. This indicates that the system reliably translates voice commands into Arduino text input, resulting in precise control of LED lighting.

CC BY NC
E-ISSN - 2773-2886 / ISSN - 2773-2894

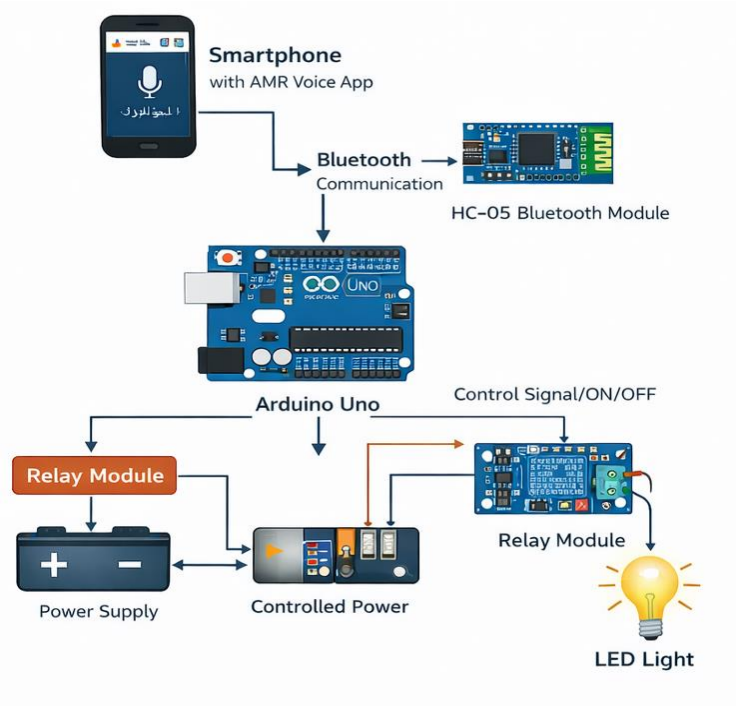

Figure 8. Voice-controlled LED lighting system.

The Figure.8 illustrates the developed system for controlling LED illumination using speech commands. Voice input is captured via a mobile interface, transmitted through a Bluetooth module, and processed by a microcontroller to switch the LED on or off in real time.

4.2 Voice-controlled robotic vehicle

This project describes the implementation of a miniature robotic vehicle with voice control using Arduino (Figure 9). The project consists of two parts: The hardware part consists of the Arduino board and its associated electronic components and other hardware components. The software part consists of the Arduino IDE, which is the environment for writing Arduino code and uploading it to Arduino boards to control the hardware. On the transmitting side, the user gives specific voice commands to the robotic vehicle via an Android application installed on a Smartphone(Abdulghani. 2020). On the receiving side, on the robotic vehicle side, the receiver module receives the commands and forwards those to the Arduino mounted on the robotic vehicle. The robotic vehicle moves

E-ISSN - 2773-2886 / ISSN - 2773-2894

forward, backward, left, right, and stops according to the voice commands. The goal of this project is to provide a human-machine interface (HMI) that allows the user to establish Arabic-language voice communication with the machine(Bakouri et al. 2022).

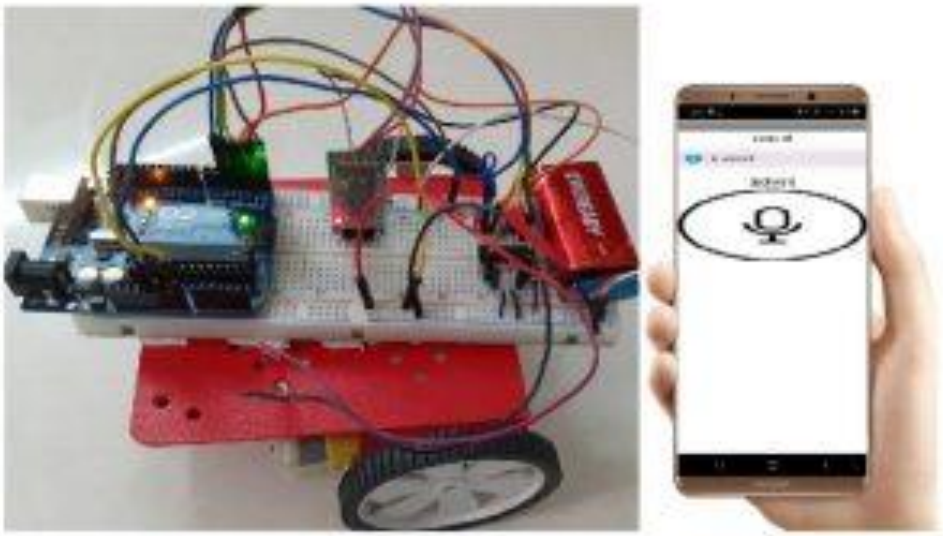

Figure 9. Prototype of Voice-controlled robotic vehicle

4.2.1 Hardware

The hardware component of the system consists of several essential elements required for the operation of the voice-controlled robotic vehicle. An Arduino Uno is used as the main controller to manage motor movements and execute user commands. Communication between the robotic vehicle and the smartphone application is achieved an HC-05 Bluetooth module. The system also includes DC motors that enable the robotic vehicle to move forward, backward, and perform turning actions. Wheels are integrated to ensure smooth mobility, while a Li-ion battery provides the necessary power supply for all components. In addition, the robotic vehicle structure is designed with a base to support and securely mount all. A Raspberry Pi 4 is also incorporated as a compact computing platform capable of running various electronic and software applications (Verma et al. 2015).

4.2.2 Software

The software component relies on the AMR Voice application, which is used to recognize and process voice commands issued by the user. The Arduino IDE serves as the development environment for writing, compiling, and uploading the

CC BY NC
E-ISSN - 2773-2886 / ISSN - 2773-2894

source code to the Arduino board. Through this software setup, the system enables real-time control of the w robotic vehicle using voice commands (Mukherjee et al. 2017).

4.2.3 System Operation

The operation of the system is based on three main stages. First, in the voice recognition stage, the robotic vehicle receives spoken commands such as “move forward” or “stop” through the smartphone application. Next, during the command processing stage, the system analyzes and interprets the received command, converting it into a corresponding control instruction. Finally, in the motion execution stage, the robotic vehicle performs the movement according to the interpreted command. Figures below illustrate the completed prototype of the Arabic voice-controlled robotic vehicle. Figure 10 presents the main components of the robotic vehicle system.

This project represents a significant advancement in assistive technology for individuals with mobility impairments. It focuses on the development and evaluation of a robotic vehicle system controlled using Arabic voice commands. The primary objective is to enhance user independence and improve quality of life within Arab communities. The results demonstrate that the system is efficient and reliable, benefiting from the integration of advanced speech recognition and artificial intelligence technologies. Furthermore, the system provides a simplified and user-friendly interface that takes into account the specific needs of its users.

E-ISSN - 2773-2886 / ISSN - 2773-2894

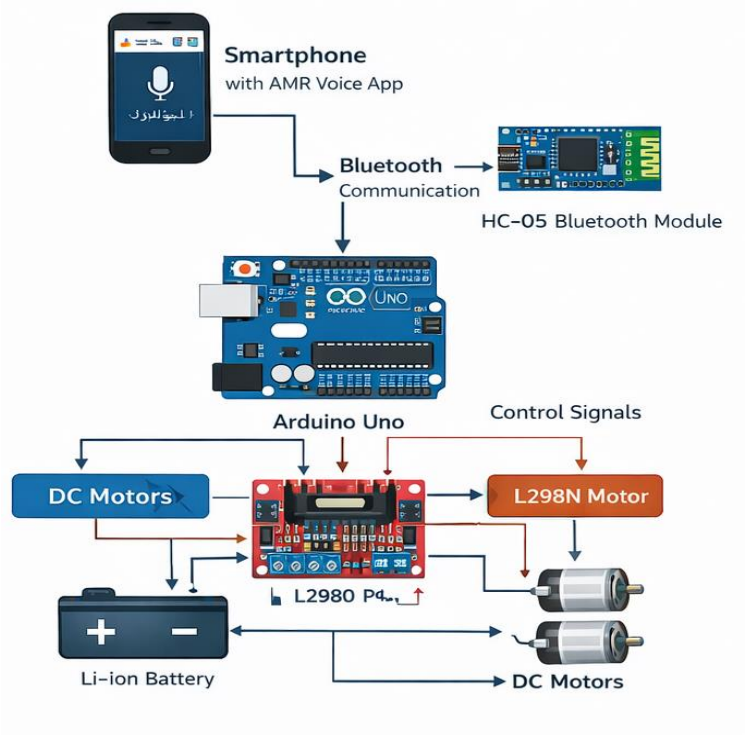

Figure 10. Robotic vehicle components

5. Experimental Results and Discussion

To evaluate the proposed system, extensive experiments were conducted on Automatic Speech Recognition (ASR) tasks involving 10 native Arabic speakers and 120 trials, targeting the recognition of six isolated Modern Standard Arabic command words (Bakri et al. 2023). Figure 11 shows the speech processing of the proposed voice-controlled system, consisting of three stages: preprocessing, feature extraction, and command recognition. The speech signal is first framed, windowed, and enhanced using pre-emphasis. Then, MFCC features along with delta and delta-delta coefficients are extracted to capture spectral and temporal information. Finally, a Hidden Markov Model (HMM) with Viterbi decoding is used to recognize the speech.

E-ISSN - 2773-2886 / ISSN - 2773-2894

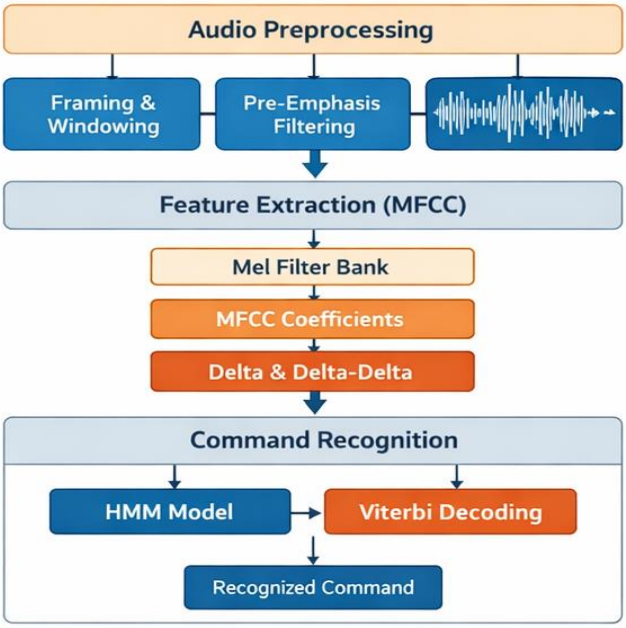

Figure 11. ASR processing steps.

Table 2 presents the per-command recognition accuracy across all 120 trials. The system achieved an overall recognition accuracy of 92.5% (111 correct out of 120 trials).

Table 2. Per-Command Recognition Accuracy

Command (Arabic)	Trials	Recognized	Failed	Accuracy (%)
أمام/ Forward	20	19	1	95%
خلف/ Backward	20	18	2	90%
يمين/ Right	20	19	1	95%
يسار/ Left	20	17	3	85%
وقف/ Stop	20	20	0	100%
إضاءة/ LED ON	20	18	2	90%
Total	120	111	9	92.5%

The command وقف(stop) achieved 100% accuracy, likely due to its phonetically distinct short vowel structure relative to the other commands. The

E-ISSN - 2773-2886 / ISSN - 2773-2894

command يسار(left) had the lowest accuracy (85%), which we attribute to potential acoustic confusion with يمين (right) caused by shared initial phonemes /j/ and /a/. This finding suggests that future vocabulary design should prioritize phonetically distinct command sets.

No statistically significant difference in accuracy was observed between male (avg. 92%) and female (avg. 93%) speakers, confirming the gender-robustness of the MFCC-based feature representation. The maximum effective Bluetooth communication range was measured at 8–10 meters in line-of-sight conditions, which is adequate for indoor assistive use.

Compared to the English-language systems reviewed in Section 2 (85–92% accuracy), the proposed system achieves competitive performance (92.5%) while operating entirely in Arabic a significantly more challenging language for ASR due to morphological complexity and dialectal diversity. The use of a resource limited embedded platform (Arduino Uno) further distinguishes this contribution from deep learning-based approaches that require GPU-accelerated inference.

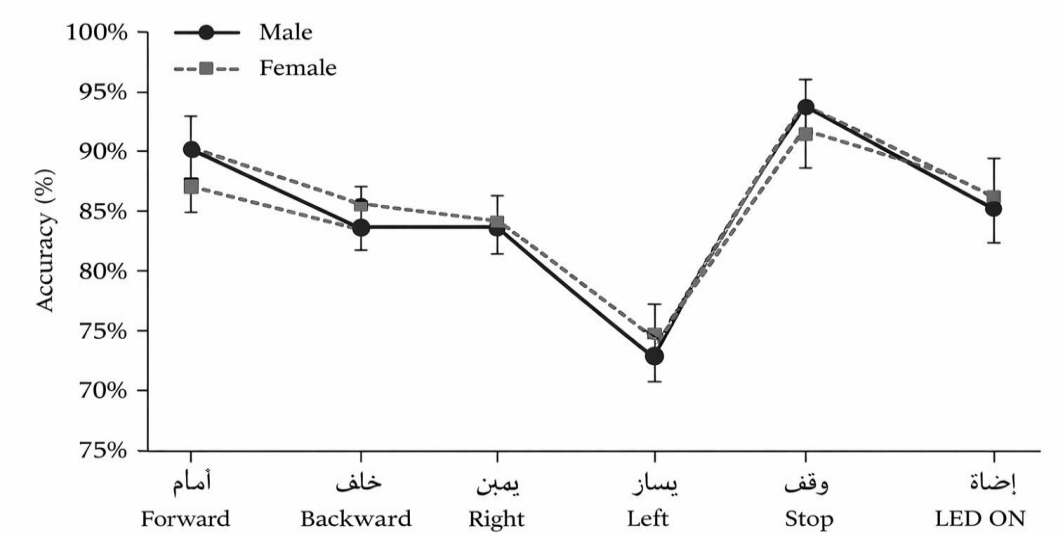

Figure 12. Voice command recognition accuracy for male and female speakers

To further validate the robustness of the proposed system, a statistical analysis was conducted to compare performance between male and female speakers. The standard deviation was estimated using a binomial model, yielding approximately 3.5% for male speakers and 3.3% for female speakers, indicating low variability

CC BY NC
E-ISSN - 2773-2886 / ISSN - 2773-2894

in recognition performance. An independent test was performed to assess the significance of the observed difference in mean accuracy (92% for male vs. 93% for female). The resulting value (−0.21) was well below the critical threshold at a 95% confidence level ($p > 0.05$), confirming that the difference is not statistically significant. These results demonstrate that the system maintains consistent performance across genders, further supporting its robustness and suitability for real-world assistive applications. As illustrated in Figure 12, the recognition accuracy across different voice commands shows very similar trends for both male and female speakers, with only minor variations. The highest performance is observed for the “stop” command, while slightly lower accuracy is noted for the “left” command. These results demonstrate that the system maintains consistent performance across genders, further supporting its robustness and suitability for real-world assistive applications.

6. Conclusion

This paper presented the design, implementation, and evaluation of an Arabic voice-controlled robotic system for people with special needs. Two hardware prototypes a voice-controlled LED circuit and a miniature voice-controlled robotic vehicle were developed using an Arduino Uno, HC-05 Bluetooth module, and the AMR Voice Android application. The system's ASR pipeline, based on MFCC feature extraction and HMM-based command recognition, achieved an overall accuracy of 92.5% across 6 Arabic command words and 10 native speakers, with no significant gender-related performance difference. The primary contribution of this work is the demonstration that reliable Arabic voice control of embedded robotic systems is achievable on low-cost commodity hardware. This addresses a documented gap in the assistive technology literature, where Arabic has been largely absent from voice-controlled robotic systems.

Future work will focus on: (1) expanding the command vocabulary to include connected speech and dialectal variants; (2) replacing the HMM-based recognizer with an end-to-end deep learning model (e.g., a compact Transformer) to improve robustness to noise; (3) integrating additional sensors (ultrasonic, camera) to enable semi-autonomous navigation; and (4) conducting extended user studies with participants who have actual mobility disabilities to evaluate real-world usability and acceptance.

E-ISSN - 2773-2886 / ISSN - 2773-2894

7. References

1. Muntasir, Nurul Fathanah, Muhammad Risafli Raif, Rahmat Hermawan, ET Muh. Anshar. "Feasibility Analysis of Smart Wheelchairs Based on Voice Recognition for People with Disability." Enthusiastic International Journal of Applied Statistics and Data Science, 2023 doi.org/10.20885/enthusiastic.vol3.iss1.art8.

2. N. Moritz, G. Wichern, T. Hori, J. Le Roux, All-in-One Transformer: Unifying Speech Recognition, Audio Tagging, and Event Detection, in: Interspeech, 2020, pp. 3112–3116. doi: 10.21437/Interspeech.2020

3. Dhouib A., Othman A., El Ghoul O., Khribi M.K., Al Sinani A. Arabic automatic speech recognition: a systematic literature review Appl. Sci., 12 (17) (2022), p. 8898 doi.org/10.3390/app12178898

4. M. Lichouri, K. Lounnas, A. Bakri, Toward building another arabic voice command dataset for multiple speech processing tasks, in: International Conference on Advances in Electronics, Control and Communication Systems, ICAECCS'23, 2023, pp. 1–5. 10.1109/ICAECCS56710.2023.10105079

5. Raiyan, Z., Nawaz, M. S., Adnan, A. A., Imam, M. H. Design of an arduino based voice-controlled automated wheelchair. IEEE Region 10 Humanitarian Technology Conference (2017)., p. 267-270. DOI: 10.55041/IJSREM29816

6. Brahmandaberi, S., end al. Voice Controlled and Obstacle Avoidance Robotic Car Using Mobile. International Research Journal of Modernization in Engineering Technology and Science, 6(4). DOI:10.13140/RG.2.2.24039.16803

7. Manojkumar, P., et al. A novel home automation distributed server management system using Internet of Things. International Journal of Ambient Energy, 1(43) 2021, p.5478-5483. http://dx.doi.org/10.1080/01430750.2021.1953590

8. Abdulghani, Mokhles M., Kasim M. Al-Aubidy, Mohammed M. Ali, ET Qadri J. Hamarsheh. "Wheelchair Neuro Fuzzy Control and Tracking System Based on Voice Recognition," article de journal (2020). DOI:10.3390/s20102872

9. Bakouri, Mohsen, Mohammed Alsehaimi, Husham Farouk Ismail, Khaled Alshareef, Ali Ganoun, Abdulrahman Alqahtani, et Yousef Alharbi. "Steering a Robotic Wheelchair Based on Voice Recognition System Using Convolutional Neural Networks." (2022).p.168 https://doi.org/10.3390/electronics11010168

E-ISSN - 2773-2886 / ISSN - 2773-2894

10. Verma, P., & Mehra, AVoice-controlled robotic system for physically challenged. International Journal of Advanced Research in Computer Engineering & Technology, 4(4), (2015). 1525-1529.
11. Mukherjee, S., & Das, SSmart wheelchair: A voice-controlled system for disabled persons. International Journal of Engineering Trends and Technology, 45(2). (2017)., 92-96.
12. A. Bakri end al "Development of an Arabic voice control system using convolutional neural networks CNN," The 2nd International Conference of Advanced Technology in Electronic and Electrical Engineering, 2025.
13. A. Bakri, K Lounnas, M Lichouri, "Arduino Voice Control for Arabic Speech Recognition using Smartphone", 149-153, Vol 3694, CEUR Workshop Proceedings ISSN 1613-0073, https://ceur-ws.org/Vol-3694/, 2023.

8. Disclaimer Regarding the Use of Generative Artificial Intelligence

This manuscript was prepared through the intellectual contributions of the authors. Generative Artificial Intelligence (GenAI) tools were not used to generate, analyze, interpret, or validate the scientific results presented in this study. Any language-assistance tools that may have been employed were limited to improving grammar and readability under the direct supervision and responsibility of the authors. The authors take full responsibility for the content, accuracy, and originality of the manuscript.

9. Declaration of Absence of Conflict of Interest

The authors declare that there are no conflicts of interest regarding the publication of this article. The research was conducted independently, and no financial, personal, or institutional relationships influenced the study design, data collection, analysis, interpretation, or publication of the results.

10. Author's Contributions

Adil Bakri: System design and implementation, Arduino programming, hardware integration, experimental validation, data collection, statistical analysis, literature review, and manuscript writing.

E-ISSN - 2773-2886 / ISSN - 2773-2894

Said Fahem: Conceptualization, methodology, speech recognition design, data analysis, manuscript review, and supervision.

11. Sources of Research Funding and Support

This research did not receive any specific grant from funding agencies in the public, commercial, or not-for-profit sectors. The work was supported by the resources and facilities provided by the authors' respective research institutions, namely the Centre for Scientific and Technical Research on Arabic Language Development (CRSTDLA), Algeria, and the Scientific and Technical Research Centre on Arid Regions (CRSTRA), Algeria.

12. Author Information

Adil Bakri is a researcher at the Scientific and Technical Research Centre on Arid Regions (CRSTRA), Algeria, and a member of the Speech Communication and Signal Processing Laboratory (LCPTS) at the Faculty of Electronics and Computer Science, University of Science and Technology Houari Boumediene USTHB. He received the Engineer degree in 2008 from University Mohmed Boudiaf of M'sila, the Magister degree in 2011 from USTHB, and the Ph.D. degree in Telecommunications in 2021 from USTHB. His research areas include: speech processing, signal processing for communication systems, speech recognition**.**

Said Fahem is a researcher at the Centre for Scientific and Technical Research on Arabic Language Development (CRSTDLA), Algiers, Algeria. He obtained a license degree in Arabic Language and Literature in 2008 from Mouloud Mammeri University of Tizi Ouzou, a Master's degree in Linguistics in 2011 from the same university, and a Ph.D. degree in 2016 from the University of Tizi Ouzou. His research interests include Arabic Natural Language Processing (NLP), Linguistics, Lexicography, Semantics, and Language Teaching

CC BY NC
E-ISSN - 2773-2886 / ISSN - 2773-2894