RSSI, Vol. 07, N°. 02, December 2018, 01-09

Revue des Sciences et Sciences de l'ingénieur

Journal of sciences and engineering sciences

ISSN 2170-0737/EISSN: 2600-7029

https://www.asjp.cerist.dz/en/PresentationRevue/303

Modelling, simulation and analysis of DSIM using artificial intelligent controller

K. Sahraoui*, A. Ameur, K. Kouzi, Y. moati, S. Bensaoucha

Electrical Engineering Department, Faculty of Technology, Laboratoire d'études et développement des matériaux semi-conducteurs et diélectriques - University of Laghouat, BP 37G route de Ghardaia – Laghouat

Article history
Submitted date: 2018-03-21
Acceptance date: 2018-11-26

Abstract

This paper presents an elaboration for speed control of dual stator induction motor (DSIM) using artificial intelligent controller. The main problem with the conventional fuzzy controllers is that the parameters associated with the membership functions and the rules depend broadly on the intuition of the experts. To overcome this problem, adaptive neuro-fuzzy inference system (ANFIS) controller is proposed in this paper. The elaboration allows to compare simulation results between classical and artificial intelligent controllers. The fuzzy logic controller (FLC) and ANFIS controllers are also introduced to the system for keeping the motor speed to be constant when the load varies. Comparison between PI, fuzzy and Adaptive neuro-fuzzy controller-based dynamic performance of DSIM drive has been presented. ANFIS-based control of DSIM will prove to be more reliable than other control methods. The performance of the DSIM drive has been analyzed for constant load and change in speed conditions.

Key-words: Proportional Integral (PI); Fuzzy logic controller (FLC); Adaptive Neuro-Fuzzy Inference System (ANFIS); Dual Stator Induction Motor (DSIM).

Résumé

Cet article présente un environnement intégré pour le contrôle de vitesse d'un moteur asynchrone double étoile (MASDE), en utilisant un contrôleur de l'intelligent artificiel. Le problème principal avec les contrôleurs flous conventionnels est que les paramètres associés aux fonctions d'appartenance et aux règles dépendent largement de l'intuition des experts. Pour surmonter ce problème, un contrôleur d'inférence adaptatif neuro-flou est proposé dans cet article. L'élaboration permet de comparer les résultats de simulation entre les contrôleurs intelligents classiques et artificiels. Les contrôleurs à logique floue et les contrôleurs ANFIS sont également introduits dans le système pour maintenir la vitesse du moteur constante lorsque la charge varie. Comparaison entre les performances dynamiques PI, floue et adaptatif neuro-flou basée sur le contrôleur du lecteur MASDE a été présenté. Le contrôle basé sur ANFIS de MASDE s'avérera plus fiable que d'autres méthodes de contrôle. Les performances du lecteur MASDE ont été analysées pour une charge constante et un changement des conditions de vitesse.

Mots-clés: Proportionnelle Intégrale; Le contrôleur à logique floue; Inférence adaptatif neuro-flou; machine asynchrone double étoile.

1. Introduction

The conventional proportional-integral (PI) controller remains the most popular design approach used in industrial applications due to its simplicity and reliability for the control of first- and second-order plants, and even high-order plants with well-defined conditions. An excellent performance can be achieved by a well-tuned PI controller [1]. However, getting a poor performance whenever the plant is subjected to some kind of disturbance or, the plant has high-order nonlinear structure is the major disadvantage [2]. In a wide range of applications induction motor due to its low cost, reliability and ruggedness is a prime choice of variable-speed drive Because of the highly coupled non-linearity and the variations of internal parameters, the tuning of PI controller becomes a challenging problem when the conventional PI design is applied to the control problem of induction motors [3].

PI controller is one of the most commonly used controllers showing good robustness. Later on, FLC became a well-known controller and has been used as independent or combined with PI to improve the performance of the electric drive [4]. According to research, an AC induction motor may consume more energy than it needs. So, using FLC can save more energy consumed by induction motor during start time or when it works in less than full load. Furthermore, the cost and complexity of controller are reduced. Fuzzy logic (FL) controllers based on fuzzy set theory are used to represent the experience and knowledge of a human operator in terms of linguistic variables that are called fuzzy rules [5]. The implementation of linguistic fuzzy rules based on the procedures done by human operators does not also require a mathematical model of the system [6]. Therefore, a fuzzy logic controller (FLC) becomes nonlinear and adaptive in nature having a robust performance under parameter variations with the ability to get desired control actions for complex, uncertain, and nonlinear systems without the requirement of their mathematical models and parameter estimation [3; 7–11].

With the advent of artificial intelligent techniques, these drawbacks can be mitigated [12, 13]. One such technique is the use of fuzzy logic in the design of controller either independently or in hybrid with PI controller [14]. FLC yields superior and faster control, but main design problem lies in the determination of consistent and complete rule set and shape of the membership functions [15]. The main concept of a neuro-fuzzy network is derived from the human learning process, where an initial knowledge of a function is first setup by fuzzy rules and then the degree of function approximation is iteratively improved by the learning capabilities of the neural network [16]. Hence, ANFIS combines the learning power of neural network with knowledge representation of fuzzy logic. Intelligent, self-learning, or self-organizing controls using expert systems, artificial intelligence, fuzzy logic, neural networks, hybrid networks, etc. have been recently recognized as the important tools to improve the performance of the power electronics-based drive systems in the industrial sectors. Combination of this intelligent control with the adaptiveness appears today as the most promising research area in the practical implementation and control of electrical drives. [17–18].

This paper presents the dynamic modeling of dual stator induction motor using differential equation and simulation using MATLAB/SIMULINK. The simulated results of the DSIM model with conventional and PI, fuzzy and adaptive neuro-fuzzy inference system (ANFIS) controller are also given. The comparative static and dynamic analysis of induction motor using artificial intelligent controller is also presented.

The rest of this paper is organized as follows. In Section II, modeling of de machine is given. Sections III present the voltage source inverter modeling. The structure proposed is given in Section IV and V. Finally, we conclude with section Discussions and conclusions.

2. Dynamic modeling and simulation of DSIM

The DSIM dynamic behavior can be expressed by voltage and torque which are time varying [19]. The differential equations that belong to dynamic analysis of induction motor are so sophisticated, that with the change of variables the complexity of these equations decreases converting polyphase winding to two-phase winding (q-d).

From the equivalent circuit as shown in Figure. 1 of the DSIM in d–q frame, the model equations are derived as:

- Stator voltage equations:

$$\begin{cases} V_{ds1} = R_{s1} i_{ds1} + \dfrac{d\varphi_{ds1}}{dt} - \omega_s \varphi_{qs1} \\ V_{qs1} = R_{s1} i_{qs1} + \dfrac{d\varphi_{qs1}}{dt} + \omega_s \varphi_{ds1} \\ V_{ds2} = R_{s2} i_{ds2} + \dfrac{d\varphi_{ds2}}{dt} - \omega_s \varphi_{qs2} \\ V_{qs2} = R_{s2} i_{qs2} + \dfrac{d\varphi_{qs2}}{dt} + \omega_s \varphi_{ds2} \end{cases} \quad (1)$$

- Rotor voltage equations:

$$\begin{cases} V_{dr} = R_r i_{dr} + \dfrac{d\varphi_{dr}}{dt} + \omega_{sr} \varphi_{qr} = 0 \\ V_{qr} = R_r i_{qr} + \dfrac{d\varphi_{qr}}{dt} - \omega_{sr} \varphi_{dr} = 0 \end{cases} \quad (2)$$

- The expressions for stator and rotor flux linkages are:

$$\begin{cases} \varphi_{ds1} = L_{s1} i_{ds1} + L_m (i_{ds1} + i_{ds2} + i_{dr}) \\ \varphi_{qs1} = L_{s1} i_{qs1} + L_m (i_{qs1} + i_{qs2} + i_{qr}) \\ \varphi_{ds2} = L_{s2} i_{ds2} + L_m (i_{ds1} + i_{ds2} + i_{dr}) \\ \varphi_{qs2} = L_{s2} i_{qs2} + L_m (i_{qs1} + i_{qs2} + i_{qr}) \\ \varphi_{dr} = L_r i_{dr} + L_m (i_{ds1} + i_{ds2} + i_{dr}) \\ \varphi_{qr} = L_r i_{qr} + L_m (i_{qs1} + i_{qs2} + i_{qr}) \end{cases} \quad (3)$$

- The electromagnetic torque is evaluated as:

$$T_{em} = p \frac{L_m}{L_m + L_r} [(i_{sq1} + i_{sq2}) \varphi_{rd} - (i_{sd1} + i_{sd2}) \varphi_{rq}] \quad (4)$$

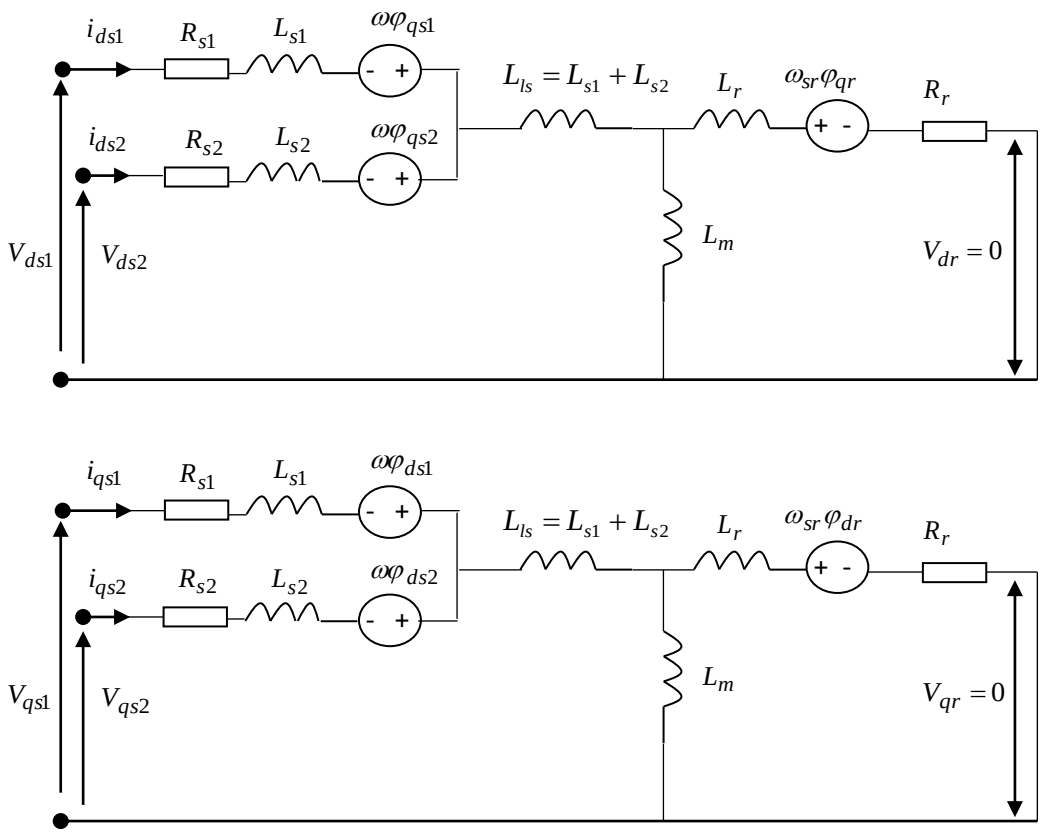

Fig.1. *d–q* model of dual stator induction motor

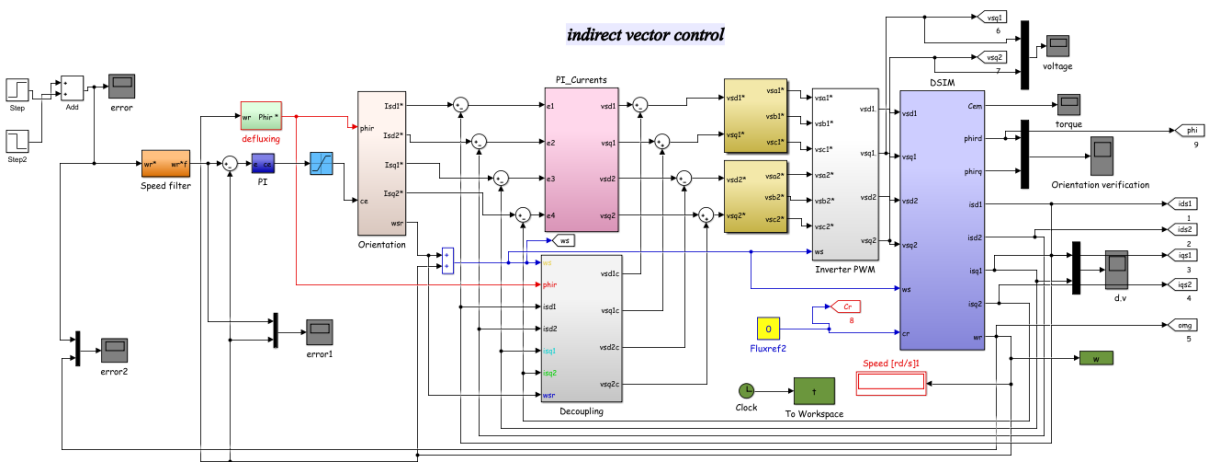

Fig.2. Simulated DSIM model in indirect vector control

- The mechanical equation of machine is described as

$$J\frac{d\Omega_r}{dt} = T_{em} - T_l - K_f\Omega_r \tag{5}$$

By using Parks Transformation, voltages are transformed to two phase in the *d–q* axes, and are applied to DSIM. In order to obtain the stator and rotor currents of DSIM in two phases, inverse Park's transformation is applied in the last stage. The block diagram of induction motor and its drive that are simulated in MATLAB/SIMULINK are shown in Fig. 2.

Therefore, decoupling the control scheme is required by compensation of the coupling effect between d and q axis current dynamic. The indirect field oriented control (IRFOC) consists in making $\varphi_{qr} = 0$ while the rotor direct flux (φ_{dr}) converges to the reference flux (φ_r) [3, 5]. By applying this principle $(\varphi_{qr} = 0, \varphi_{dr} = \varphi_r^*)$ into (1), (2), and (4) equations, the finals expressions of the electromagnetic torque and slip speed are respectively:

$$T_{em} = pL(i_{qs1}^* + i_{qs2}^*)\varphi_r^* \tag{6}$$

$$\omega_{sr}^{*} = \frac{LR_r(i_{qs1}^{*} + i_{qs2}^{*})}{\varphi_r^{*}} \tag{7}$$

with, $L = \dfrac{L_m}{L_m + L_r}$

Consequently, the electrical and mechanical equations for the system after these transformations in the space control may be written as follows:

$$\frac{d\varphi_r}{dt} = -\frac{R_r}{L_m + L_r}\varphi_r + \frac{R_r L_m}{L_m + L_r}(i_{ds1} + i_{ds2}) \tag{8}$$

$$\frac{d\Omega_r}{dt} = \frac{1}{J}\left\{P\frac{L_m}{L_m + L_r}(i_{qs1} + i_{qs2})\varphi_r^{*} - T_l - f\Omega_r\right\} \tag{9}$$

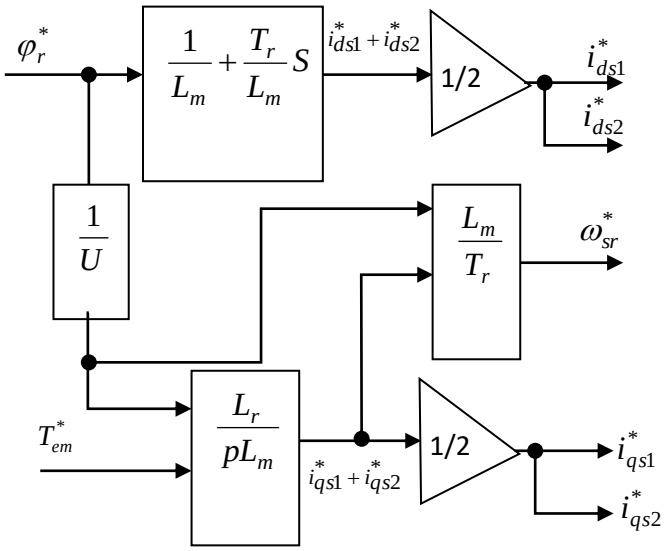

Fig.3. Bloc of indirect rotor field-oriented

controllers still require the mathematical model of induction motor. Besides, they may produce overshoot or long settling time in case of load disturbance or sudden change of reference speed. To overcome these drawbacks, intelligent control systems, such as fuzzy logic, have been widely used for induction motor control. These control systems are based on artificial intelligence theory and conventional control theory [20, 21]. A pulse width modulated (PWM) inverter employing pure sinusoidal modulation cannot provide sufficient voltage to enable a standard motor to operate at rated values. Sufficient voltage can be obtained from the inverter by over modulating, however, producing distortion of the output waveform [19, 22]. Figure 4 shows proposed control scheme for an DSIM in open loop and closed loop for static and dynamic analysis. The PI controller gain is optimized using artificial intelligent controllers to get the optimized output of the controller in order to control the speed of the induction motor as shown in Fig. 4.

3.1 PI controller

Scalar control method is widely used in industries due to its simple structure characterized by low steady-state error. Proportional integral (PI) controllers are commonly used in scalar speed control of induction motors in addition to AI controllers. The output of the PI controller is updated by updating the PI controller gains (Kp and Ki) based on the control law in the presence of parameter variation and drive nonlinearity.

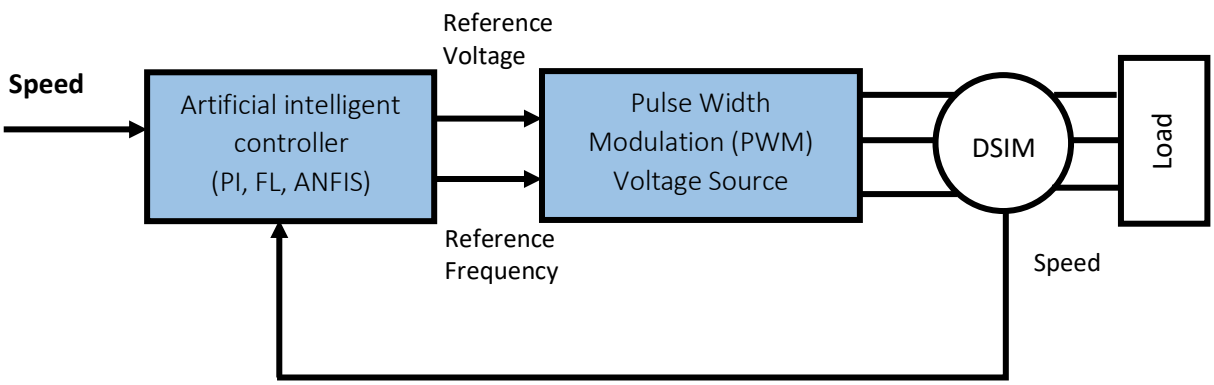

Fig.4. Proposed drive system for static and dynamic analysis

3. Control approaches of DSIM drive

For several decades, researchers used classical methods to control the speed of DSIM. Such controllers (like conventional PI controller) show simplicity in design and stability in performance. Even though, the conventional

The use of PI controllers for speed control of induction machine drives is characterized by an overshoot during tracking mode and a poor load disturbance rejection. This is mainly caused by the fact that the complexity of the system does not allow the gains of the PI controller to exceed a

certain low value. If the gains of the controller exceed a certain value, the variations in the command torque controller gains are very high. Without overshoot, the motor reaches the reference speed rapidly and step commands are tracked with almost zero steady-state error. Load disturbances are rapidly rejected and variations of some of the motor parameters are fairly adjusted. Figure 5 shows the structure of PI controller.

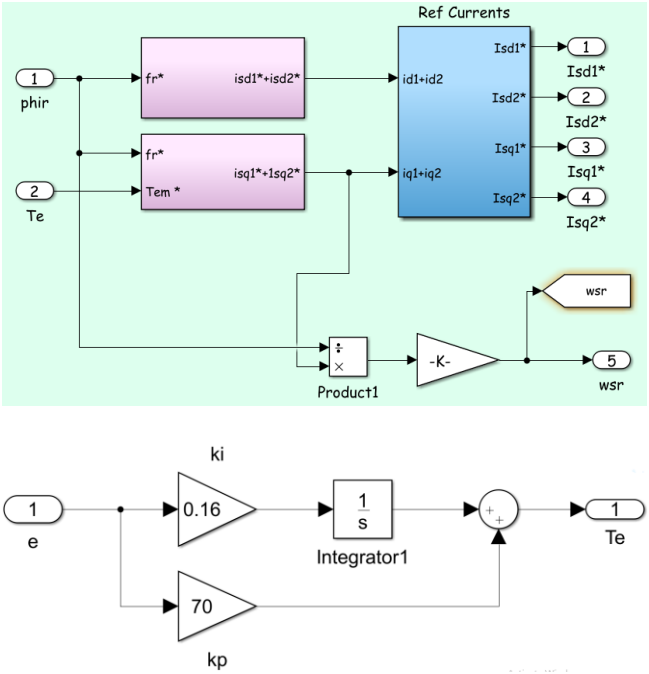

Fig.5. PI controller

3.2 Fuzzy logic controller

Apart from PI controller, the speed of DSIM is also adjusted by the fuzzy controller [23]. In Table 1, the fuzzy rules implemented into the controller are given. This fuzzy controller is designed to have two input (the error and error variation denoted respectively *e* and *de*) and one control variable output denoted *du* (*u* represents torque variation of speed controller) as seen in Fig. 6. Algorithmic cost is very high, but the rejection of disturbances is effective. In addition, this controller can do without compensation algorithms. Further, to decrease the torque ripples the three levels neutral point clamped (NPC) inverter is used.

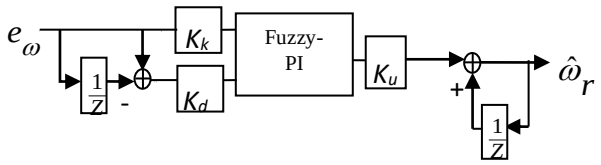

Fig.6. The block diagram of FPI controller

Table 1. fuzzy rule decision

Δe \ e	NB	NM	NS	ZE	PS	PM	PB
NB	NB	NM	NM	NS	NS	NS	ZE
NM	NM	NM	NS	NS	NS	ZE	PS
NS	NM	NM	NS	NS	ZE	PS	PM
ZE	NB	NM	NS	ZE	PS	PM	PM
PS	NS	NS	ZE	PS	PS	PM	PM
PM	NS	ZE	PS	PS	PS	PM	PM
PB	ZE	PS	PS	PM	PM	PB	PB

The fuzzy algorithm uses membership functions of triangular and trapezoidal type in the present study. The universe of discourse of the input and output in chosen between -3 to 3 as shown in Fig. 7.

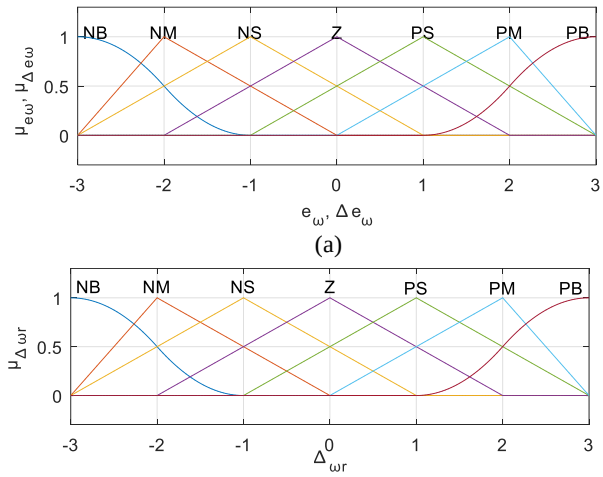

(b)

Fig.7. (a) Membership functions of eω, Δeω input, (b) Membership functions of output

3.3 Adaptive neuro-fuzzy inference system

The inputs will be *e(k)* and *Δe(k)* [24, 25–27]. Firstly, a Takagi-Sugeno (T-S) fuzzy structure is created by the ANFIS and then the given training data is modeled. Then, the ANFIS is written as

Rule i: $$i: if\ e_1 \text{ is } A_{i1} \text{ and } e_n \text{ is } A_{in} \quad \text{Then } u_i = p_{i1}e_1 + \ldots + p_{in}e_n + r_i \tag{10}$$

where Rules i denotes the ith fuzzy rules, $i = 1,2\ldots j$, A_{in} is the fuzzy set in the antecedent associated with the kth input variable at the ith fuzzy rule, and $p_{i1},\ldots, p_{in}, r_i$ represent the fuzzy resulting parameters.

A detailed coverage of ANFIS can be found in [28, 29]. For a first order Sugeno-type of rule base with two inputs x, y and one output, the structure of ANFIS is shown in Fig. 8. By the use of the ANFIS, the u_p can be obtained as:

$$u_p = \frac{w_1}{w_1 + \ldots + w_j} u_1 + \ldots + \frac{w_j}{w_1 + \ldots + w_j} u_j \tag{11}$$

Where $\overline{w}_1 = \dfrac{w_1}{w_1 + \ldots + w_j}$ and $\overline{w}_j = \dfrac{w_j}{w_1 + \ldots + w_j}$

Owing to $u_i = p_{i1}e_1 + \ldots + p_{in}e_n + r_i$, the (16) can be restated as

$$\begin{aligned} u_p &= \overline{w}_1 u_1 + \ldots + \overline{w}_j u_j \\ &= (\overline{w}_1 e_1) p_{11} + \ldots + (\overline{w}_1 e_n) p_{1n} + \overline{w}_1 r_j \\ &+ \\ &\vdots \\ &+ (\overline{w}_j e_1) p_{11} + \ldots + (\overline{w}_1 e_n) p_{jn} + \overline{w}_j r_j \end{aligned} \tag{12}$$

The equation (12) implies that the proposed ANFIS with five layer structure. The first layer represents for inputs, the second layer is for fuzzification, the third and fourth layers indicate for fuzzy rule evaluation, and the fifth layer denotes for defuzzification. Figure 8 displays the structure of the ANFIS. The ANFIS model is shown in Figure 9. It states that if the cross product of output and input is positive, then it results in increase in weight, otherwise decrease in weight.

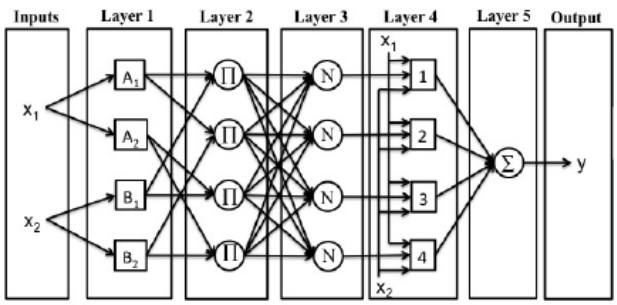

Fig.8. ANFIS layout

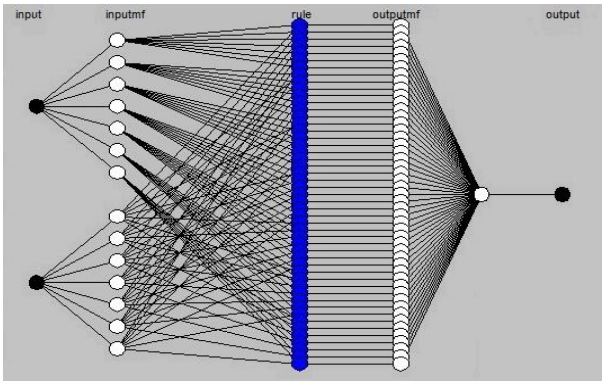

Fig.9. Structure of ANFIS controller for DSIM

4. Performance assessment of artificial intelligent controller-based DSIM drives

A complete simulation model for controlled DSIM drive incorporating PI, fuzzy logic and ANFIS controller is developed in closed-loop mode. The performance of the artificial intelligent-based DSIM drive is investigated under different operating conditions. In order to prove the superiority of ANFIS, a comparison is made with the response of conventional PI, FL, and neural network-based induction motor drive. The performance of PI, FL and ANFIS were analyzed and compared. The parameters of the DSIM considered in this study are summarized in Appendix.

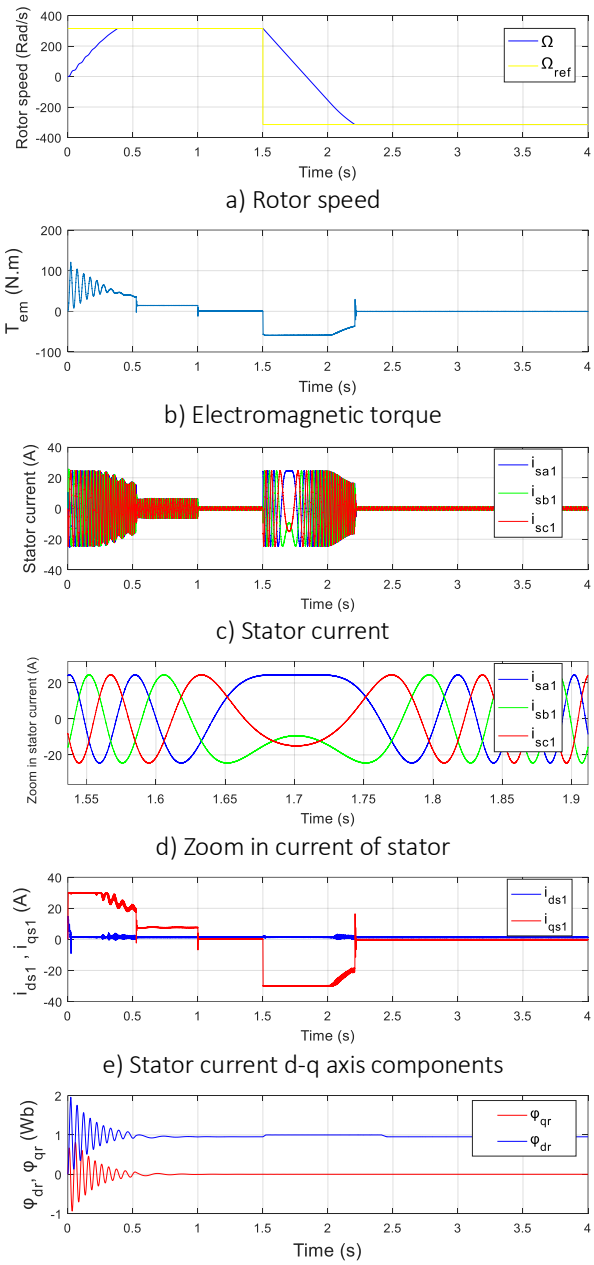

Fig.10. Simulation results for PI controller: all controller at constant load and change in speed command.

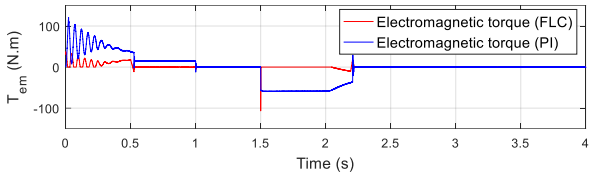

Fig.11. Electromagnetic torque response of PI and FL controllers.

The ANFIS model is designed using MATLAB's Fuzzy Logic Toolbox (Fig. 12.a-c) which was used for analyzing its performance. The architecture of the realized ANFIS model had the following specifications; number of training data: 10001, number of test data pairs: 5000 and number of fuzzy rules 7. The adaptive network utilizes the hybrid method to optimize the membership functions and the parameters so that the prediction error is minimized as shown in Fig. 13.

a) Electromagnetic torque

b) Rotor speed

c) Direct flux

d) Quadrature flux

Fig.12. Training with ANFIS controller: all controller at constant load and change in speed command.

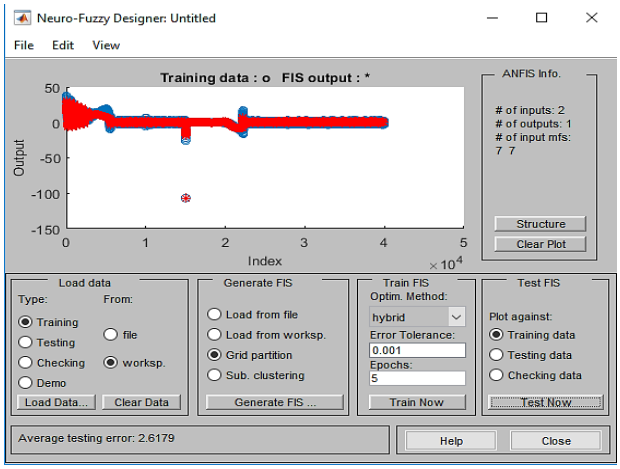

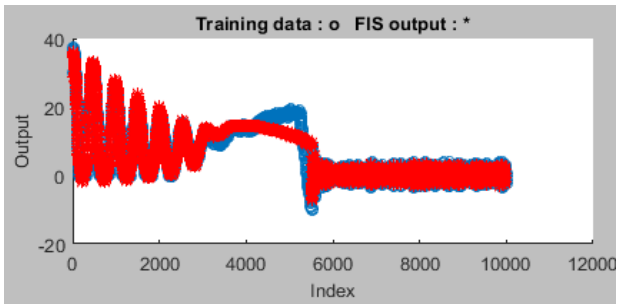

Fig.13. Illustration of electromagnetic torque prediction with ANFIS for DSIM at speed Ωref=315rad/s. The predicted FIS output is indicated by red crosses and the test data is represented by the blue circles.

5. Conclusion

Simulation results of the DSIM are presented with conventional PI, FLC and ANFIS controllers. The comparative results prove that the performance control with ANFIS controller is superior to that with conventional PI and fuzzy. Thus by using ANFIS controller, the transient response of DSIM has been improved greatly and the dynamic response of the same has been made faster.

As future work, we look forward to apply our idea in experimental environment. The purpose of studying this experimental system is to prove its theorical from work, aiming at a better understanding of this kind of systems.

Appendix

Table 2. DSIM parameters

P_n	1.5MW
V_n	220/380V
p	2
r_{s1} , r_{s2}	2.97mΩ
r_r	3.72 mΩ
L_{s1}, L_{s2}	0.022mH
L_r	0.006 mH
L_m	0.3672 mH
J	0.0625 kg.m2
K_f	0.001N.m.s/ad

Table 3. Nomenclature

i_{sd}, i_{sq}	"*d–q*" stator current components
i_{rd}, i_{rq}	"*d–q*" rotor current components
J	Moment of inertia
K_f	Visous bearing friction coefficient
L_{s1}, L_{s2}	stator leakage inductance
L_m	Magnetizing inductance
r_r, L_r	Rotor resistance, rotor inductance
P	Number of pole pairs
r_{s1}, r_{s2}	stator resistance
T_{em}	Electromagnetic torque
T_l	Load torque
V_{rd}, V_{rq}	"*d–q*" rotor voltages
V_{sd}, V_{sq}	"*d–q*" stator voltages
φ_{sd}, φ_{sq}	"*d–q*" stator flux
φ_{rd}, φ_{rq}	"*d–q*" rotor flux
ω_r	Rotor angular speed

Acknowledgment

This work was supported by the Electrical Engineering Department, University Amar thelidji, Laghouat, Algeria. The authors would like to thank the members of laboratory for their precious remarks and suggestions.

References

[1] Mohan N. Advanced electric drives: analysis, control modeling using Simulink, 1st ed. Natick (MA): Singapore: MNPERE; 2001.

[2] Chan TF, Shi K. Applied intelligent control of induction motor drives. 1st ed. Hoboken (NY): IEEE Willey Press; 2011.

[3] Ivanov S, Cbmpeanu A, Bitoleanu A, et al. MATLAB-SIMULINK library for AC drives simulation. IEE International Conference on Simulation; York. 1998. p. 195–200.

[4] Ghani SN. Digital computer simulation of three-phase induction machine dynamics-A generalized approach. IEEE Trans. Ind. Appl. 1988;24:106–114.

[5] Zadeh LA. Fuzzy logic: issues, contentions and perspectives. IEEE International Conference on Acoustics, Speech, and Signal Processing; Adelaide (SA). 1994.

[6] Bose BK. Fuzzy logic and neural networks in power electronics and drives. IEEE Industry Applications Magazine. 2000;57–63.

[7] Shi KL, Chan TF, Wong YK, et al. Modelling and simulation of the three-phase induction motor using Simulink. Int. J. Elect. Eng. Edu. 1999;36:163–172.

[8] Orille AL, Sowilam GMA, Valencia JA. A new simulation of symmetrical three phase induction motor under transformations of Park. J. Comput. Ind. Eng. 1999;37:359–362.

[9] Sybille G, Le-Huy H. Digital simulation of power systems and power electronics using the MATLAB/SIMULINK power system blockset. IEEE Power Engineering Society – Winter Meeting 2000 Special Technical Session; Singapore. 2000. p. 2973–2981.

[10] Spiller PA, Haffner JF, Pereira LFA. A Matlab/Simulink-based platform for real-time planning and execution of control techniques applied to induction motors. IEEE 32nd Annual Power Electronics Specialists Conference; Vancouver, (BC). Vol. 2; 2001. p. 834–838.

[11] Bauer P, Van Duijsen PJ. Challenges and advances in simulation. IEEE 36th Conference on Power Electronics Specialists; Recife. 2005. p. 1430–1436.

[12] Mohanty NK, Muthu R, Senthil Kumaran M. A survey on controlled AC electrical drives. Int. J. Electr. Power Eng. 2009;3:175–183.

[13] Bose BK. Power electronics and motor drives recent progress and perspective. IEEE Trans. Ind. Electron. 2009;56:581–588.

[14] Bose BK. Recent advances in power electronics. IEEE Trans. Power Electron. 1992;7:2–16.

[15] Mishra R, Singh SP, Singh D, et al. Investigation of transient performance of VSI-fed IM drives using volts/Hz and vector control techniques. 2nd International Conference on Power, Control and Embedded Systems; Allahabad, India. 2012. p. 1–6.

[16] Bose BK. Artificial neural network applications in power electronics. 27th Annual Conference of the IEEE Industrial Electronics Society; Denver (CO). Vol. 3; 2001. p. 1631–1638.

[17] Uddin MN, Wen H. Development of a self-tuned neuro-fuzzy controller for induction motor drives. IEEE Conference on Industry Applications 39th IAS Annual Meeting; Seattle (WA). 2004. p. 2630–2636.

[18] Safdar Fasal TK, Unnikrishnan L. A comparative study of proportional integral controller and fuzzy logic controller in scalar speed control of three phase induction motor. Int. J. Electr. Electron. Data Commun. 2013;1:18–21.

[19] Sahraoui K, Katia K and Ameur A ''A Robust Sensorless Iterated Extended Kalman Filter for Electromechanical Drive State Estimation'', in EEA – Electrotehnica Electronica Automatica. Vol. 65, No. 2, PP.46- 53, 2017.

[20] Narendra KS, Mukhopadhyay S. Intelligent control using neural networks. Intelligent control systems: Teory and applications. New York (NY): IEEE Press; 1996.

[21] Abu-Rub H, Awwad A. Artifcial neural networks and fuzzy logic based control of AC motors. IEEE International Conference on Electric Machines and Drives; Miami (FL). 2009. p. 1581–1586.

[22] Mir SA, Zinger DS, Elbuluk ME. Fuzzy controller for inverter fed induction machines. IEEE Conference on Industry Applications Society Annual Meeting; 1992. p. 464–471.

[23] Abu-Rub H, Awwad A. Artifcial neural networks and fuzzy logic based control of AC motors. IEEE International Conference on Electric Machines and Drives; Miami (FL). 2009. p. 1581–1586.

[24] Pillay P, Krishnan R. Modeling of permanent magnet motor drives. IEEE Trans. Ind. Electron. 1988;35:537–541.

[25] Buchner P, Nehiri MH. A block-oriented PC-based simulation tool for teaching and research in electric drives and power systems. IEEE Trans. Power Syst. 1991;6:1299–1304.

[26] Doumbia ML, Roy G, Rajagopalan V. An integrated solution for simulating electrical drive systems with Matlab/Simulink. Proceedings of the IEEE International Symposium on Industrial Electronics; Guimarães. 1997; p. 952–955.

[27] Ehsani M, Ramani KR. Recent advances in power electronics and applications. Southcon Conference Record; Orlando (FL). 1994. p. 8–13.

[28] Y.J. Mon, Sliding mode ANFIS-based MIMO fuzzy neural network control for robotic systems. IJCSI Int. J. Comput. Sci. 10(2), 83–86, 2013.

[29] S.A. Mehta, J. Patel, Implementation of freedom robotic arm manipulator with ANFIS algorithm. Int. J. Eng. Res. Technol. (IJERT), 2(4), 2494–2497, 2013.