Journal of Materials and Engineering Structures

Research Paper

Reliability evaluation of 2D semi-rigid steel frames accounting for corrosion effects

Trong-Ha NGUYEN [a], ***Duy-Duan NGUYEN*** [a,*]

[a] *Department of Civil Engineering, Vinh University, Vinh 461010, Vietnam*

ARTICLE INFO

Article history :

Received : 28 June 2022

Revised : 22 September 2022

Accepted : 25 September 2022

Keywords:

2D steel frame

Semi-rigid connection

Corrosion effect

Reliability analysis

ABSTRACT

Nowadays, steel frames are widely used in civil and industrial engineering structures. The design process for steel frames with semi-rigid beam-column connections is an interesting topic for designers and researchers. However, the current design codes purely deal with the structural reliability at the pristine and the degradation of steel due to corrosion is not specified. This study proposes a procedure for evaluating the reliability of two-dimensional semi-rigid steel frames considering corrosion effects. A series of Monte Carlo simulations are performed to evaluate the reliability of the corroded steel structures. The random variables including corrosion phenomenon, semi-rigid connection, and applied load, are considered in the proposed method. The safety deterioration of the steel structures due to the corrosion phenomenon until 50 years is obtained. Additionally, the effects of input parameters, which are safety factors and coefficients of variation, on the reliability of structures are examined in the present study. Finally, a verification of this study and previous results is performed, highlighting the capability of the proposed method.

1 Introduction

The metal corrosion phenomenon has great harm to infrastructures, especially steel structures. Corrosion has not only destructive effects on structural capacity and safety but also to the expensive cost for maintenance and replacement [1, 2]. Therefore, studies on the assessment of deterioration capacity and reliability of structures due to corrosive effects are always extremely necessary and attractive to researchers.

There are many studies, which investigated the effects of metal corrosion on the durability of structures. Landolfor et al. [2, 3] presented a damage model induced by atmospheric corrosion for metal structures. This report combined corrosion models, which were proposed by International Standard ISO 9224 [4], Albrecht and Hall [5], and Klinesmith et al. [6]. The structural reliability method has been not only widely used in the design and assessment of structures subjected to simple loadings but also in complex and extreme problems such as during earthquakes or corrosion effects. Kayser and Nowak [7]

* *Corresponding author,*
E-mail address: duyduankxd@vinhuni.edu.vn

e-ISSN: 2170-127X, (cc) BY-SA

RESEARCH REVIEW of Sciences and Technologies

developed a damage model, which was used for evaluating the reliability of a corroded steel girder bridge over time and the effects of parameters on the safety of corroded bridges. Likewise, Czarnecki and Nowak [8] proposed time-variant reliability models for steel girder bridges. Der Kiureghian [9] assessed the reliability of the steel frame under the dynamic loads generated from the earthquake El Centro in 1940 using the β-probability index method. Melchers [10] investigated the influence of corrosion on the reliability of steel offshore structures.

For the steel structures, the modelling approach of the beam-column connection has a significant impact on structural performance and reliability. Numerous studies presented the design process of the semi-rigid connection of steel structures and clarified the influence of this model on performances of such structures [11-31]. Reliability analyses of steel frames considering semi-rigid connections were also performed [32-37]. Recently, Nguyen and Nguyen [38] evaluated the structural reliability of steel-concrete composite beams accounting for corrosion effects. Wang et al. [39] conducted a systematic review on reliability of offshore wind turbine support structures. Liu [40] examined the role of connection behaviour and the associated uncertainties on the system reliabilities of semi-rigid steel frames designed by direct design method. The aforementioned studies mostly focused on the structural reliability of steel structures considering semi-rigid connections. A study on the investigation of the effects of metal corrosion on structural reliability of semi-rigid steel frames is not systematically conducted yet.

This paper performs the reliability and durability assessment of two-dimensional (2D) steel frames with semi-rigid connections considering the effect of metal corrosion. An algorithm using Monte Carlo simulation method is proposed to utilize in analyses and assessments. The safety deterioration of the steel structures due to the corrosion phenomenon until 50 years is obtained. In addition, the effects of input parameters, which are safety factor and coefficient of variation, on the reliability of structures are examined in the present study.

2 Corrosion and stiffness of the beam-column joint of steel structures

2.1 Design code

The assessment of the corrosion effect on the steel structures was mentioned in the design standards of some countries and Europe [41]. The European structural design codes [42-44] provided only general recommendations and basic principles that are mainly concerned about the use of coating protective systems, the choice of corrosion-resistant materials, and structural redundancy. The EN 1993–1–1 [42] stated a few common principles, such as the opportunity of providing corrosion protection measures by means of surface protection systems. The European Standard EN 12500 [45], edited by the European Committee for Standardization, defined the procedure for classification, determination, and estimation of the atmospheric corrosion by assessing the mass loss of standard samples, after one-year exposure. In particular, EN ISO 9223 [41] provided a classification of the atmospheric corrosion on the basis of three key factors. The existing design standards and code provisions do not give a specific process in determining the structural reliability and durability of structures considering metal corrosion effects as well as the structural deterioration with time.

2.2 Corrosion modeling

Atmospheric corrosion of steel structures in various environments was intensively studied and proposed by Komp [46]. Corrosion models usually describe the corrosion depth as a function of time in the form of a power model and can be written as follows.

$$d(t) = At^B \tag{1}$$

where $d(t)$ is the corrosion depth $[\mu m, g/m^2]$, t is the exposure time $[year]$, A is the corrosion rate in the first year of exposure, B is the corrosion rate long-term decrease. A and B are depended on the environment, where the structure is located in, and these parameters are presented in Table 1 [46]. The modelling in Eq. (1) and average values for corrosion parameters in Table 1 have been also used in some studies elsewhere [7, 47, 48].

2.3 Stiffness of the beam-column joint

Stiffness of semi-rigid beam-column connections of an I-section portal steel frame in this paper is determined by the experimental formula of Kozlowski et al. [49], as described in Eq. (2). The proposed formula was validated by the authors, as shown in Fig. 1.

$$S_j = \frac{S_{j,ini}}{\eta} \tag{2}$$

where S_j is the elastic stiffness of the connection (kNm/rad); η is the hardness adjustment coefficient, which depends on connection structures, and it is presented in Eurocode 3 [44]; $S_{j,ini}$ is the initial stiffness (kNm/rad) and determined by

$$S_{j,ini} = K_1 h_c^{0.44} h_b^{1.2} t_p^{0.35} d^{0.005} - K_2 \tag{3}$$

where h_c (mm) is the height of the column section (HEB); h_b (mm) is the height of the beam section (IPE); t_p (mm) is the thickness of the end plate and d (mm) is the bolt diameter. K_1 = 1.5 and K_2 = 19211 are the experiment coefficients, which are identified from experimental results [49]. Because of their experiment origin, these coefficients possess potential randomness.

Table 1 – Average values of corrosion parameters *A* and *B* for carbon steel and weathering steel

Environment	Carbon steel		Weathering steel	
	A	***B***	***A***	***B***
Rural	34.0	0.65	33.3	0.50
Urban	80.2	0.59	50.7	0.57
Marine	70.6	0.79	40.2	0.56

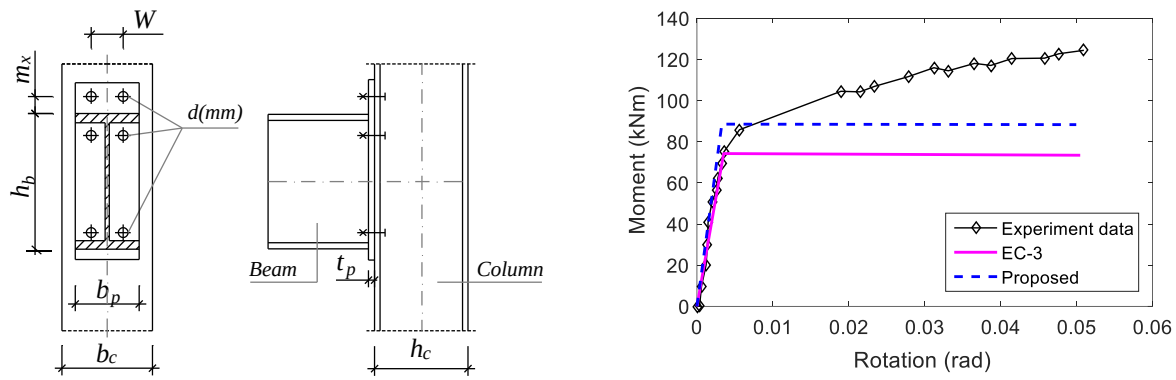

(a) Beam-column connection (b) Moment-rotation relationship

Fig. 1 – Validation of the proposed formula

3 Monte Carlo simulation method

Monte Carlo simulation method, which is based on the using of pseudo-random numbers and the law of large number to assess the reliability of any systems, the unsafe probability of the system (P_f), is determined by Eq. (4). It should be noted that the safe domain is defined by the condition $f(X) > 0$.

$$P_f = \int I_{f(X)<0} f_X(x)dx = E\left[I_{f(X)<0}\right] \tag{4}$$

where X is the random vector containing all the input random variables, $I_{f(X)<0}$ is the indicator function defined by

$$I_{f(X)<0} = \begin{cases} 1 & \text{if} \quad f(X) < 0 \\ 0 & \text{if} \quad f(X) \geq 0 \end{cases} \tag{5}$$

According to the theory of statistics, if we have N realizations of the random vector X, by propagating the randomness, we can obtain a sample of N realizations of the indicator function. The expected value of the indicator function can be approximatively determined by taking the mean of the sample, expressed by

$$\hat{P}_f = E\left[I_{f(X)<0}\right] = \frac{1}{N}\sum_{i=1}^{N} I_{f(X)<0}^{i} \tag{6}$$

Lemaire et al. [47] pointed out that the 95% confidence interval of the estimation in Eq. (6) can be defined by

$$\hat{P}_f\left(1 - 200\sqrt{\frac{1-\hat{P}_f}{N\hat{P}_f}}\right) \leq P_f \leq \hat{P}_f\left(1 + 200\sqrt{\frac{1-\hat{P}_f}{N\hat{P}_f}}\right) \tag{7}$$

The steps of reliability assessment and scheme using Monte-Carlo simulation are shown in Fig. 2.

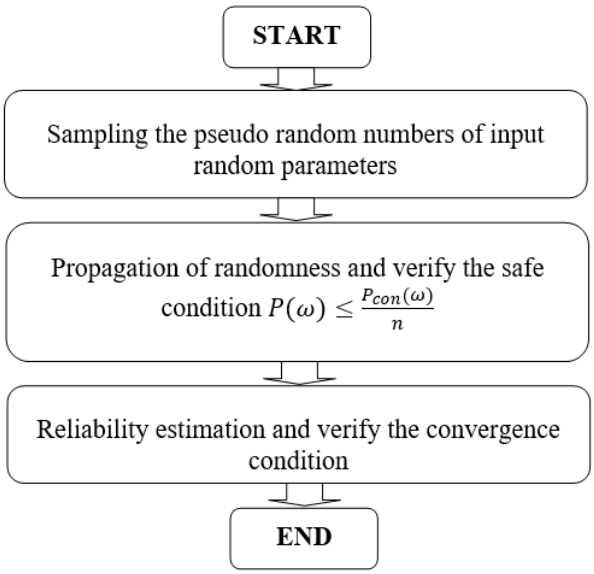

Fig. 2 – Flowchart of reliability assessment using Monte Carlo simulation

4 Monte Carlo simulation method

Firstly, a validation of the reliability method by Monte Carlo simulation is conducted using a beam structure, as shown in Fig. 3. The input parameters of the design problem are presented in Table 2. Our proposed method results are then compared with those of Thoft-Cristensen & Baker [50], which the Hasofer-Lind (H-L) reliability index [51] was used. Table 3 presents a comparison of results between these reliability methods. A small error in Table 3 indicates the capability of the proposed program. It should be noted that the maximum deflection of the beam (u_{max}) is $u_{max} = \frac{1}{192}\left(\frac{PL^3}{EI}\right)$ and the failure mode is reached when $u_{max} \geq L/100$, where EI is the stiffness of the beam.

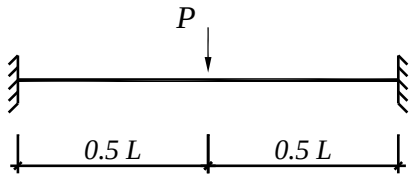

Fig. 3 – A beam for validation of reliability assessment

Table 2 – Statistical properties of random variables for the proposed method

Input parameter	Law of probability	Mean	Std. Dev.
P	Normal	4.0 (kN)	1.0 (kN)
E	Normal	$2x10^7$ (kN/m^2)	$0.5x10^7$ (kN/m^2)
I	Normal	$167x10^{-7}$ (m^4)	$167x10^{-8}$ (m^4)
L	-	6.0 (m)	-

Table 3 – Comparison of the obtained results

Reliability method	Safe probability	Error
Proposed Monte Carlo simulation	0.9986	0.01%
H-L reliability index in Thoft-Cristensen & Baker [48]	0.9987 (β = 3.0)	

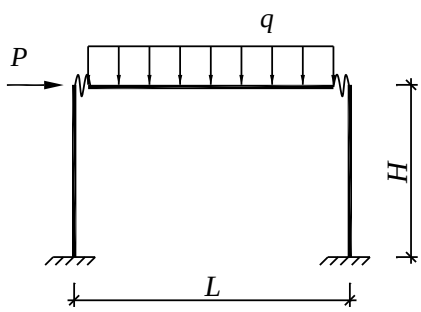

Fig. 4 – A portal steel frame with semi-rigid connections

Table 4 – Input parameters of the verified portal frame

Beam (cm)					Column (cm)					End plate (cm)	Bolt (cm)	Material (kN/cm^2)		Applied load	
L	h_{wb}	b_f	t_f	t_w	H	h_{wc}	b_f	t_f	t_w	t_p	d	E	f	P (kN)	q (kN/cm)
500	30	20	2	2	400	30	20	2	2	2	1.6	2.1e+04	21	100	0.05

Additionally, an extra verification of the proposed Monte Carlo simulation is performed for a portal steel frame considering two cases, which are rigid and semi-rigid joints. Input parameters are shown in Fig. 4 and Table 4. We used SAP2000, a commercial finite element analysis program, to verify the proposed simulation. The comparison of results is shown in Table 5. Here, the column sections SC1 and SC3 represent for the bottom of the left and right columns, respectively, while SC2 and SC4 are located at the top of the columns. Whereas the beam sections SB1, SB2, and SB3 are located at the left, right ends, and at the middle of the beam, respectively. It can be observed that the error is very small (i.e., < 0.2%) in the case of semi-rigid joints and slightly increased (i.e., < 2.5 %) for rigid joints. These results confirm the capability of the proposed Monte Carlo simulation.

Table 5 – Comparison of results between proposed program and SAP2000

Element	Section	Semi-rigid joint			Rigid joint		
		SAP2000	This study	error	SAP2000	This study	error
Column	SC1	-	-	-	7483.0	7531.8	0.65%
	SC2	-20041.0	-20000	0.20%	-11515.9	-11352.0	1.42%
	SC3	-	-	-	-8900.0	-9019.9	1.35%
	SC4	19958.9	20000	0.21%	12100.7	12096.0	0.04%
Beam	SB1	-	-	-	7483.0	7531.8	0.65%
	SB2	-	-	-	-8900.0	-9019.9	1.35%
	SB3	1562.5	1562.5	0.0%	853.8	832.8	2.46%

5 Reliability analysis of steel frame structures

5.1 Design of cross-sections of beam and column

In fact, the dimensions of cross-sections of steel structures have been chosen in the internal force calculation. The design of cross-sections in this step is to verify their safety conditions that are according to TCVN 5575 [52], a design standard for steel structures in Vietnam, and it is determined as follows.

$$\text{for beam:}\begin{cases}\max\limits_{i=1..3}(\sigma_{ri},\sigma_{cri})\le f\\ n_w\ge\dfrac{h_w}{t_w}\\ n_f\ge\dfrac{b_f}{t_f}\end{cases}\qquad\text{for column:}\begin{cases}\max\limits_{i=1..2}(\sigma_{ri},\sigma_{cri})\le f\\ n_w\ge\dfrac{h_w}{t_w}\\ n_f\ge\dfrac{b_f}{t_f}\end{cases}\tag{8}$$

$$\text{for displacement: }\Delta_c\max_{i=1..3}(\Delta_c^i)\le[\Delta]$$

where σ_{ri} and σ_{cri} are resistance and critical stresses at the ith section, n_w and n_f are local buckling coefficients of web and flange of the cross sections, and f is yield strength of the structural steel.

5.2 Deterministic model and uncertainty model

A deterministic model is the structural steel analysis problem, in which the input parameters are those of geometry$\left(a,L,b,h,b_{fc},t_{fc},h_{wc},b_{fb},t_{fb},h_{wb}\right)$, K_1 = 1.5 and K_2 = 19211 are experiment coefficients, E is the Young' modulus of the material, p is the applied load, A and B are the corrosion depth coefficients. This model can be written in forms of $X=\left[a,L,b,h,b_{fc},t_{fc},h_{wc},b_{fb},t_{fb},h_{wb},K_1,K_2,A,B\right]$. P_{con} is called the safety condition, as expressed by Eq. (9).

$$P_{\text{con}}=\Im(X)\tag{9}$$

The uncertainty model is constructed based on the deterministic model by considering the randomness of some input parameters. In this paper, we distinct two vectors of input parameters, the first one is the group of parameters assumed to be deterministic $X_1=\left[a,L,b,h,b_{fc},t_{fc},h_{wc},b_{fb},t_{fb},h_{wb}\right]$ and the second one is the group of parameters assumed to be ramdom $X_2(\omega)=[K_1(\omega),K_2(\omega),A(\omega),B(\omega)]$ with ω represents the randomness of the parameters. This model can be written as follows

$$P_{con}(\omega)=\Im(X_1,X_2(\omega))\tag{10}$$

5.3 Reliability assessment of corroded steel frames using Monte Carlo simulation

The reliability assessment of steel structures is constructed in MATLAB language based on the corrosion modelling, stiffness of the beam-column joint, finite element difference method, and Monte Carlo simulation. The proposed procedure for assessing the structural reliability of steel structures is shown in Fig. 5.

6 Numerical examples

In this section, the proposed procedure is applied for the reliability assessment of three kinds of steel structure models with semi-rigid connections, which are steel beam, portal frame, and multi-story frame. All the structural models are assumed to be exposed from 10 to 50 years. According to Secer and Uzun [48], corrosion analyses from 10 to 50 years are accounted because the 10-year exposure is a critical point for corrosion behavior and the 50-year is assumed as the service life of the steel frame structures.

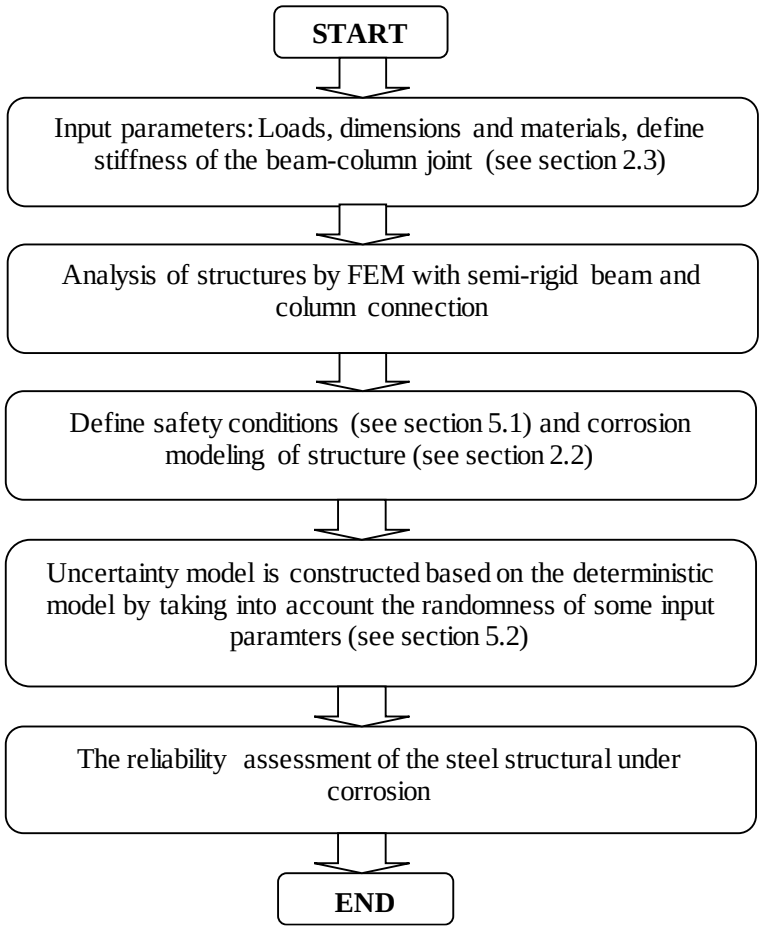

Fig. 5 – Flowchart of reliability evaluation of corroded semi-rigid steel frames using Monte Carlo simulation

6.1 Steel beam with semi-rigid connection

The investigated steel beam with a semi-rigid connection is shown in Fig. 6. Deterministic input variables and uncertain input variables, as well as their representative parameters, are shown in Table 6 and Table 7. The structural reliability and durability assessments under corrosion are determined for exposure time ranged from 10 and 50 years with safety factor n = 1.1, 1.15, 1.2, 1.25, 1.3.

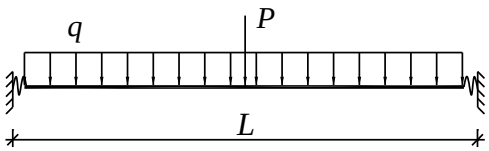

Fig. 6 – Steel beam with semi-rigid connection

Table 6 – Deterministic input variables

Variable	Value	Variable	Value	Variable	Value
L (cm)	400.0	h_b (mm)	500.0	d (mm)	22.0
h_c (mm)	500.0	t_p (mm)	20.0	E (kN/cm^2)	2.0E+04

Table 7 – Uncertainty input variables and representative parameters

Random variable	***A***		***B***	
Law of probability	Uniform		Uniform	
Representative parameters	reference	interval	reference	interval
	80.2	[0.95 – 1.05]	0.59	[0.95 – 1.05]
Random variable	K_1		K_2	
Law of probability	Uniform		Uniform	
Representative parameters	reference	interval	reference	interval
	1.5	[0.95 – 1.05]	19211	[0.95 – 1.05]
Random variable	P		q	
Law of probability	Normal		Normal	
Representative parameters	μ_P (kN)	CV_p	μ_q (kN/m)	CV_q
	100.0	0.10	20.0	0.10

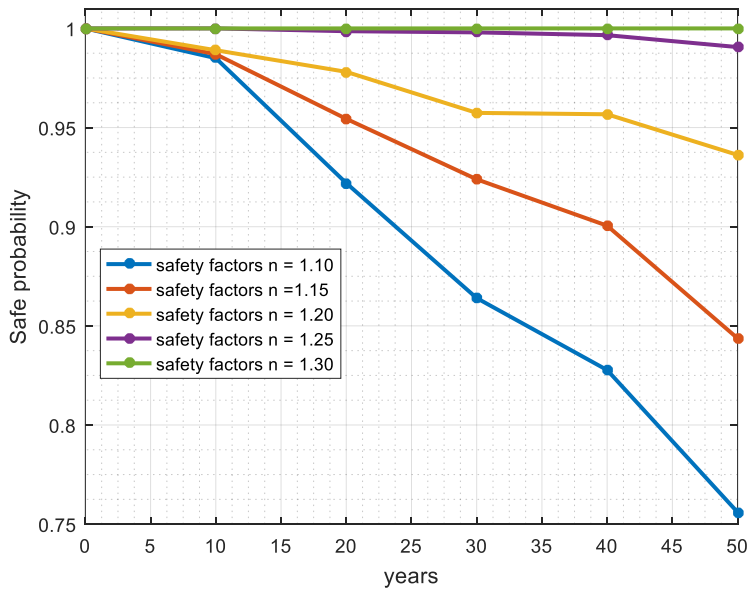

Fig. 7 – The reliability of the midpoint of beam under corrosion

Fig. 7 shows the probability of safety of the beam at the middle under corrosion with various safety factors. It can be found that the probability of safety is reduced with a decrement of safe factor. Since the safety factor reduced from 1.30 to

1.25, the probability of safety is mostly constant with exposing time. Table 8 shows the effect of safety factor and corrosively exposing time on the safe probability of the semi-rigid steel beam. Based on this table we can observe that the safe probability of the beam using Monte Carlo simulation is ranged from 0.7560 (75.6%) to 1.00 (100%) after considering 145,552 samplings and computational time in 15.0 mins. The used convergence criterion of 2.5% justifies the confidence of the estimated reliability. This result also shows that even though we have taken the safety factor of 1.10 in the analysis, but the reliability of the structure after 50 years is only 75.6%. It is probably due to the randomness of the input parameters. When the safety factor of 1.30 is taken into the analysis, the reliability of the structure after 50 years is reached to 100%.

Table 8 – Effect of safe factor and corrosively exposing time on the safe probability of the steel beam

n	**Year**					
	0	**10**	**20**	**30**	**40**	**50**
1.10	1.000	0.9850	0.9220	0.8630	0.8077	0.7560
1.15	1.000	0.9870	0.9544	0.9229	0.8925	0.8630
1.20	1.000	0.9890	0.9781	0.9674	0.9567	0.9462
1.25	1.000	1.0000	0.9986	0.9966	0.9956	0.9906
1.30	1.000	1.0000	1.0000	1.0000	1.0000	1.0000

It is needed to validate the convergence of the proposed Monte Carlo simulation for satisfying the accuracy of the analysis. Fig. 8 shows the convergence of the safe probability of the beam using Monte Carlo simulation. The converged value of 0.9810 (98.10%) after 1905 samplings with computational effort in 10 mins. The used convergence criterion of 2.5% confirms the confidence of the estimated reliability. This result also implies that although the safety factor of 1.10 is taken into the analysis the reliability of the structure is only 98.10%.

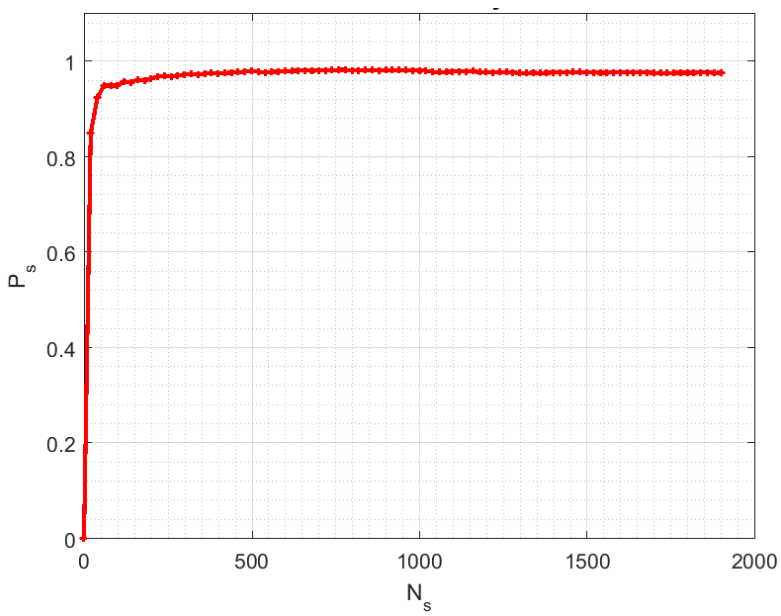

Fig. 8 – Convergence of the safe probability in the Monte Carlo simulation

6.2 Portal frame with semi-rigid connection

A portal steel frame with a semi-rigid connection is considered as shown in Fig. 9. Deterministic inputs variables parameters and uncertainty inputs variables and their representative parameters in shown Tables 9 and 10. Similar to the beam, the reliability assessment and durability analysis under corrosion are performed for exposing time from 10 to 50 years with safety factor n = 1.1, 1.15, 1.2, 1.25, and 1.3.

Fig. 10 shows the probability of safety of the frame under corrosion with various safety factors. It is observed that the probability of safety is reduced with a decrement of safety factor. Table 11 shows the effect of safety factor and corrosively

exposing time on the safe probability of the semi-rigid steel portal frame. From this table, we can recognize that the safe probability of the beam using Monte Carlo simulation is ranged from 0.7345 (73.45%) to 0.9606 (96.06%) after 250,000 samplings running in 60.0 mins. This result also reveals that even if the safety factor of 1.10 is used in the analysis, but the reliability of the structure after 50 years is 73.45%. Meanwhile, the safety factor of 1.30 is taken, the reliability of the structure after 50 years is reached to 96.60%. It is probably due to the randomness of the input parameters.

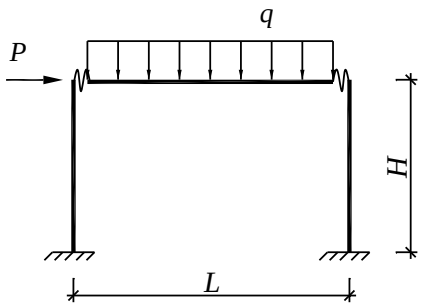

Fig. 9 – The single-story steel frame with semi-rigid connection

Table 9 – Deterministic inputs variables parameters

Geometry of beam (cm)					Geometry of column (cm)				
L	h_{wb}	b_f	t_f	t_w	H	h_{wc}	b_f	t_f	t_w
500.0	30.0	20.0	2.0	2.0	400.0	30.0	20.0	2.0	2.0
End plate (cm)			Bolt (cm)		Material (kN/cm^2)				
t_p			d		E			f	
2.0			1.6		2.1E+04			21.0	

Table 10 – Uncertainty input variables and representative parameters

Random variable	***A***		***B***	
Law of probability	Uniform		Uniform	
Representative parameters	reference	interval	reference	interval
	80.2	$[0.95-1.05]$	0.59	$[0.95-1.05]$
Random variable	K_1		K_2	
Law of probability	Uniform		Uniform	
Representative parameters	reference	interval	reference	interval
	1.5	$[0.95-1.05]$	19211	$[0.95-1.05]$
Random variable	$\alpha = qL/P$		q	
Law of probability	Normal		Normal	
Representative parameters	μ_α	CV_α	μ_α (kN/m)	CV_α
	0.01	0.15	1.30	0.15

6.3 Multi-story steel frame with semi-rigid connection

It is known that the variation of input random variables and the safe factor have an influence directly but inversely on the safe probability of the structure. Thus, in order to quantify the effect of these parameters, different coefficients of variation (CV) of the compression load CV = 0.05, 0.1, 0.15, 0.2, 0.25 and various safety factors n = 1.1, 1.15, 1.2, 1.25, 1.3 are considered in the numerical analysis. The randomness of the empirical coefficients K_1, K_2 and A and B in Eq. (1) is assumed to be unchanged in the interval $[0.95-1.05]$ of the reference value. The multi-story frame steel under corrosion is analysed

with a range of exposing time from 10 and 50 years. Fig. 11 shows the 2D multi-story steel frame with two bays and two stories. Geometry, structural sections of the frame, and applied loads are shown in Table 12.

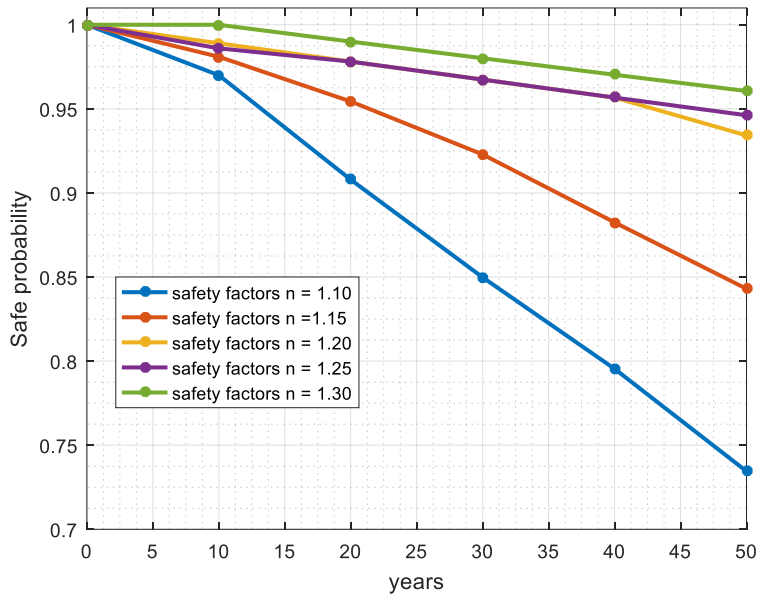

Fig. 10 – Reliability of the portal steel frame under corrosion

Table 11 – Effect of the safety factor and corrosion on the safe probability of the portal frame

n	Year					
	0	**10**	**20**	**30**	**40**	**50**
1.10	1.0000	0.9700	0.9079	0.8498	0.7954	0.7345
1.15	1.0000	0.9810	0.9544	0.9229	0.8825	0.8430
1.20	1.0000	0.9890	0.9781	0.9674	0.9567	0.9342
1.25	1.0000	0.9860	0.9781	0.9674	0.9567	0.9462
1.30	1.0000	1.0000	0.9900	0.9801	0.9703	0.9606

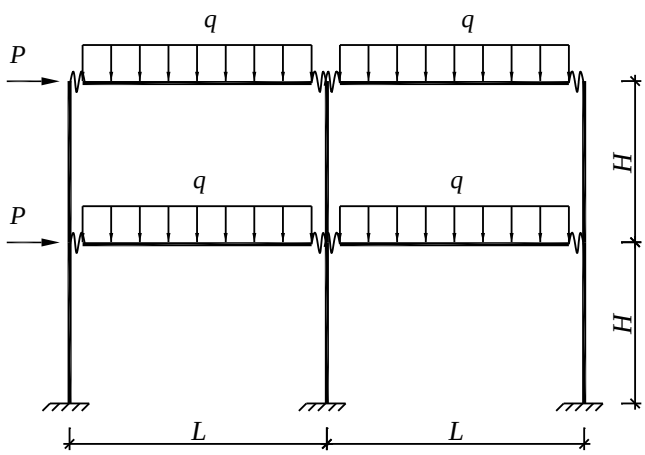

Fig. 11 – Two-bay two-story steel frame

The effects of CV and safe factor on the safe probability of the frame are shown in Figs. 12 and 13. We can easily observe that the effects of CV and safety factors on the probability of safety are inversed. It means that as CV increased the probability of safety is decreased. By contrast, the probability of safety is increased together with the sate factor. It shows that if there are many random parameters (i.e., high randomness in the structural design) or in the optimization problem, the use of the local coefficient such as the overload coefficient does not seem to be sufficient. Thus, the structure may be in a vulnerable state. In this case, it is necessary to determine a global safety factor, as done in this study, to assure the absolute safety of the structure. For example, under corrosion about 10 years in this test, if the coefficient of variation is 0.05, the global safety factor needs to be of 1.30 for obtaining the safe probability of 100%. If the CV is set to 0.10 the global safety factor needs a greater value (e.g., 1.30).

Table 12 – Deterministic input parameters

Geometry of beam (cm)					Geometry of column (cm)				
L	h_{wb}	b_f	t_f	t_w	H	h_{wc}	b_f	t_f	t_w
500.0	30.0	20.0	2.0	2.0	400.0	30.0	20.0	2.0	2.0
End plate (cm)			Bolt (cm)		Material properties (kN/cm^2)				
t_p			d		E			f	
2.0			1.6		2.1E+04			21.0	

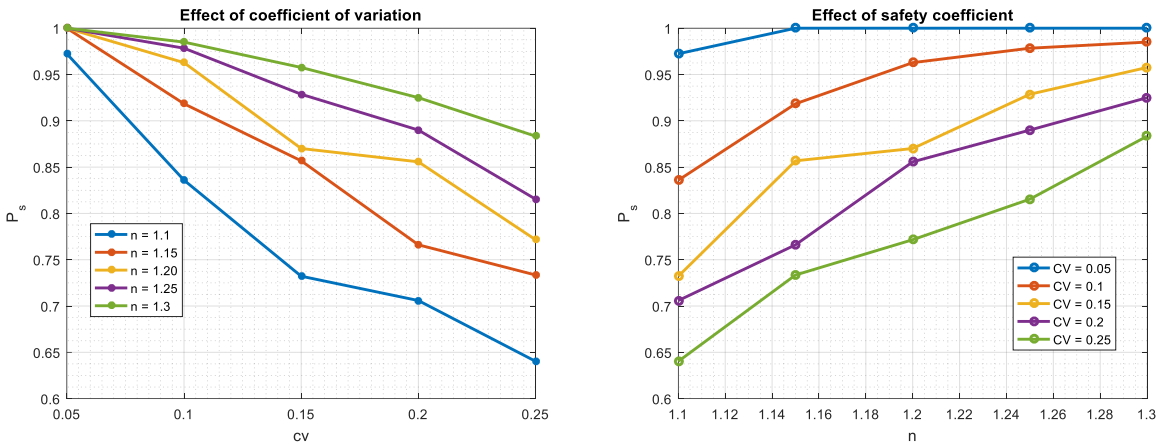

Fig. 11 – Effect of CV (left) and safe factor (right) on the safe probability of the multi-story frame under 10-year corrosion

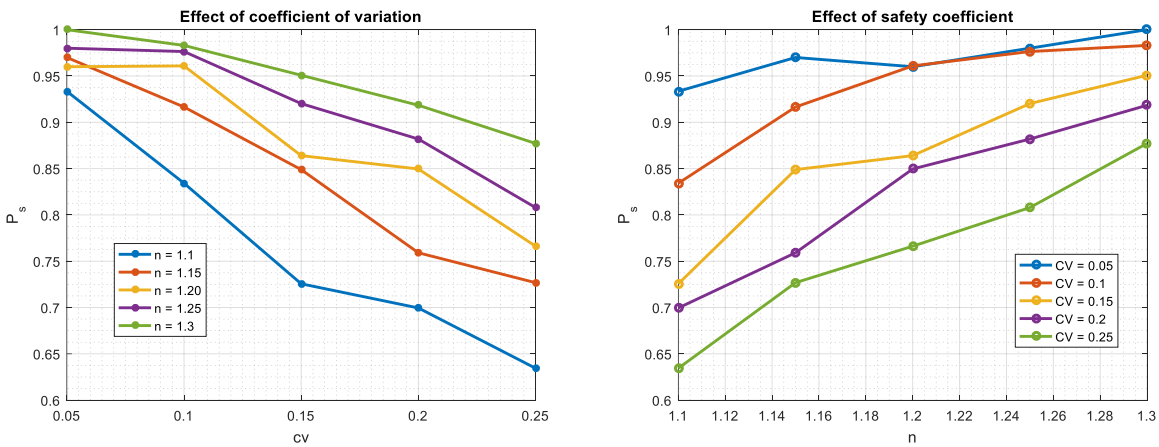

Fig. 12 – Effect of CV (left) and safe factor (right) on the safe probability of the multi-story frame under 50-year corrosion

7 Conclusions

This paper proposed an algorithm to assess the structural reliability of the two-dimensional steel frames with semi-rigid connections considering the influence of metal corrosion. The numerical process is developed based on the corrosion model of Komp [43] and Monte Carlo simulation. A wide range of corrosive exposing time from 10 to 50 years is considered in the structural reliability assessment. The effect of safety factor and coefficients of variation (CV) on the probability of safety is also examined. The numerical analysis results reveal that the proposed algorithm, which is numerically developed based on the Komp corrosion model and Monte Carlo simulations, is capable of structural reliability assessment of 2D steel frames considering semi-rigid connections and corrosion effect. Additionally, a variation of structural reliability with corrosively exposing time is quantified. Overall, as time increased the probability of safety is reduced. Moreover, the probability of safety of structures is decreased as CV increased. By contrast, the probability of safety is increased together with an increment of sate factor. Finally, the developed procedure in this study can be applied for 2D steel frame structures. It shoult be noted that an extended application for 3D steel frames and others is highly feasible, however additional numerical tests and verifications are required.

Conflicts of interest

The authors declare that they have no potential conflicts of interest in this paper.

REFERENCES

[1]- G.H. Koch, M.P.H. Brongers, N.G. Thompson, Y.P. Virmani, J.H. Payer, Corrosion Cost and Preventive Strategies in the United States. (2002).

[2]- R. Landolfo, L. Cascini, F. Portioli, Modeling of Metal Structure Corrosion Damage: A State of the Art Report. Sustainability, 2(7) (2010) 2163-2175. doi:10.3390/su2072163.

[3]- R. Landolfo, G. Di Lorenzo, M. Guerrieri. Modelling of the damage induced by atmospheric corrosion on 19th century iron structures. in Proceedings of the Italian National Conference on Corrosion and Protection. (2005).

[4]- E. ISO, 9224. Corrosion of metals and alloys: corrosivity of atmospheres: Guiding Values for the Corrosivity Categories. European Committee for Standardization (CEN). Brussels, Belgium, (1992).

[5]- P. Albrecht, T.T. Hall, Atmospheric Corrosion Resistance of Structural Steels. J. Mater. Civ. Eng., 15(1) (2003) 2-24. doi:10.1061/(ASCE)0899-1561(2003)15:1(2).

[6]- D.E. Klinesmith, R.H. McCuen, P. Albrecht, Effect of Environmental Conditions on Corrosion Rates. J. Mater. Civ. Eng., 19(2) (2007) 121-129. doi:10.1061/(ASCE)0899-1561(2007)19:2(121).

[7]- J.R. Kayser, A.S. Nowak, Reliability of corroded steel girder bridges. Struct. Saf., 6(1) (1989) 53-63. doi:10.1016/0167-4730(89)90007-6.

[8]- A.A. Czarnecki, A.S. Nowak, Time-variant reliability profiles for steel girder bridges. Struct. Saf., 30(1) (2008) 49-64. doi:10.1016/j.strusafe.2006.05.002.

[9]- A. Der Kiureghian, Structural reliability methods for seismic safety assessment: a review. Eng. Struct., 18(6) (1996) 412-424. doi:10.1016/0141-0296(95)00005-4.

[10]- R.E. Melchers, The effect of corrosion on the structural reliability of steel offshore structures. Corros. Sci., 47(10) (2005) 2391-2410. doi:10.1016/j.corsci.2005.04.004.

[11]- C. Batho, H. Rowan, Investigations on beam and stanchion connections. Second Report of the Steel Structures Research Committee. London, (1934).

[12]- J.C. Rathbun, Elastic Properties of Riveted Connections. Transactions of the American Society of Civil Engineers, 101(1) (1936) 524-563. doi:10.1061/TACEAT.0004766.

[13]- B. Sourochnikoff, Wind Stresses in Semi-Rigid Connections of Steel Framework. Transactions of the American Society of Civil Engineers, 115(1) (1950) 382-393. doi:10.1061/TACEAT.0006428.

[14]- G.R. Monforton, T.S. Wu, Matrix Analysis of Semi-Rigidly Connected Frames. Journal of the Structural Division, 89(6) (1963) 13-42. doi:10.1061/JSDEAG.0000997.

[15]- M.J. Frye, G.A. Morris, Analysis of Flexibly Connected Steel Frames. Can J Civ Eng, 2(3) (1975) 280-291. doi:10.1139/l75-026.

[16]- W.-F. Chen, E.M. Lui, Effects of joint flexibility on the behavior of steel frames. Comput. Str., 26(5) (1987) 719-732. doi:10.1016/0045-7949(87)90021-6.

[17]- A. Azizinamini, J.B. Radziminski, Static and cyclic performance of semirigid steel beam-to-column connections. J. Struct. Eng., 115(12) (1989) 2979-2999. doi:10.1061/(ASCE)0733-9445(1989)115:12(2979).

[18]- F.-H. Wu, W.-F. Chen, A design model for semi-rigid connections. Eng. Struct., 12(2) (1990) 88-97. doi:10.1016/0141-0296(90)90013-I.

[19]- N. Kishi, W. Chen, Y. Goto, K. Matsuoka, Design aid of semi-rigid connections for frame analysis. Eng. J., 30(3) (1993) 90-107.

[20]- A.S. Elnashai, A.Y. Elghazouli, Seismic behaviour of semi-rigid steel frames. J. Constr. Steel Res., 29(1) (1994) 149-174. doi:10.1016/0143-974X(94)90060-4.

[21]- K.M. Abdalla, W.-F. Chen, Expanded database of semi-rigid steel connections. Comput. Str., 56(4) (1995) 553-564. doi:10.1016/0045-7949(94)00558-K.

[22]- E.M. Lui, A. Lopes, Dynamic analysis and response of semirigid frames. Eng. Struct., 19(8) (1997) 644-654. doi:10.1016/S0141-0296(96)00143-5.

[23]- A.S. Elnashai, A.Y. Elghazouli, F.A. Denesh-Ashtiani, Response of Semirigid Steel Frames to Cyclic and Earthquake Loads. J. Struct. Eng., 124(8) (1998) 857-867. doi:10.1061/(ASCE)0733-9445(1998)124:8(857).

[24]- S.-E. Kim, S.-H. Choi, Practical advanced analysis for semi-rigid space frames. Int. J. Sol. Str., 38(50) (2001) 9111-9131. doi:10.1016/S0020-7683(01)00141-X.

[25]- Y.B. Kwon, H.S. Chung, G.D. Kim, Experiments of Cold-Formed Steel Connections and Portal Frames. J. Struct. Eng., 132(4) (2006) 600-607. doi:10.1061/(ASCE)0733-9445(2006)132:4(600).

[26]- J.-F. Wang, G.-Q. Li, Testing of semi-rigid steel–concrete composite frames subjected to vertical loads. Eng. Struct., 29(8) (2007) 1903-1916. doi:10.1016/j.engstruct.2006.10.014.

[27]- Saravanan, M, J. Arul, S, Marimuthu, V, Prabha, P, Advanced analysis of cyclic behaviour of plane steel frames with semi-rigid connections. Steel Comp. Struc. Int. J., 9 (2009) 381-395. doi:10.12989/scs.2009.9.4.381.

[28]- Y. Liu, L. Xu, D.E. Grierson, Influence of Semi-Rigid Connections and Local Joint Damage on Progressive Collapse of Steel Frameworks. Copmut. Aided Civil Infrastruct. Eng., 25(3) (2010) 184-204. doi:10.1111/j.1467-8667.2009.00616.x.

[29]- M.E. Kartal, H.B. Basaga, A. Bayraktar, M. Muvafık, Effects of Semi-Rigid Connection on Structural Responses. Electron. J. Struct. Eng., 10 (2010) 22-35. doi:10.56748/ejse.10122.

[30]- H.R. Valipour, M.A. Bradford, Nonlinear P-Δ analysis of steel frames with semi-rigid connections. Steel Comp. Struc. Int. J., 14(1) (2013) 1-20. doi:10.12989/scs.2013.14.1.001.

[31]- P.-C. Nguyen, S.-E. Kim, Nonlinear elastic dynamic analysis of space steel frames with semi-rigid connections. J. Constr. Steel Res., 84 (2013) 72-81. doi:10.1016/j.jcsr.2013.02.004.

[32]- H. Hong, S. Wang, Reliability of Steel frame systems with Semi-Rigid connections. Institute for Catastrophic Loss Reduction Toronto, ON M5C 2R9, Canada, 2003.

[33]- M.A. Hadianfard, R. Razani, Effects of semi-rigid behavior of connections in the reliability of steel frames. Struct. Saf., 25(2) (2003) 123-138. doi:10.1016/S0167-4730(02)00046-2.

[34]- M. Hadianfard. Reliability based design optimization of semi-rigid steel frames. in 11th International Conference on Optimum Design of Structures and Materials in Engineering, OPTI. (2009), 131-142.

[35]- M. Gündel, B. Hoffmeister, M. Feldmann. Reliability Analysis on Capacity Design Rules for Steel Frames. Wiesbaden: Springer Fachmedien Wiesbaden. (2014), 337-348. doi:10.1007/978-3-658-02810-7_28.

[36]- H.-T. Thai, B. Uy, W.-H. Kang, S. Hicks, System reliability evaluation of steel frames with semi-rigid connections. J. Constr. Steel Res., 121 (2016) 29-39. doi:10.1016/j.jcsr.2016.01.009.

[37]- B.M. Agostini, M.S.d.R. Freitas, R.A.d.M. Silveira, A.R.D.d. Silva, Structural reliability analysis of steel plane frames with semi-rigid connections. REM-Int. Eng. J., 71 (2018) 333-339. doi:10.1590/0370-44672017710044.

[38]- T.-H. Nguyen, D.-D. Nguyen, Reliability Assessment of Steel-Concrete Composite Beams considering Metal Corrosion Effects. Adv. Civil Eng., 2020 (2020) 8817809. doi:10.1155/2020/8817809.

[39]- L. Wang, A. Kolios, X. Liu, D. Venetsanos, R. Cai, Reliability of offshore wind turbine support structures: A state-of-the-art review. Renewable Sustainable Energy Rev., 161 (2022) 112250. doi:10.1016/j.rser.2022.112250.

[40]- H. Liu. System reliability calibrations for the Direct Design Method of planar steel frames with partially restrained connections. Doctor of Philosophy. Faculty of Engineering and Information Technologies, School of Civil Engineering. The University of Sydney, 2018.

[41]- E. ISO, 9223. Corrosion of metals and alloys: corrosivity of atmospheres: Classification. European, Committee for Standardization (CEN) Brussels, Belgium. (1992).

[42]- EN, 1990. Eurocode: Basis of Structural Design :Part 1–1, European Committee for Standardization (CEN) Brussels, Belgium. (2002).

[43]- EN, 1993-1-1. Eurocode3: Design of Steel Structures, European Committee for Standardization (CEN) Brussels, Belgium. (2004).

[44]- ENV, 1993-1-4. Eurocode 3 : Design of Steel Structures - Part 1 – 4 : General Rules-Supplementary Rules for Stainless Steel, European Committee for Standardization (CEN) Brussels,Belgium. (1996).

[45]- EN, 12500. Corrosion Likelihood in Atmospheric Environment, European Committee for Standardization (CEN) Brussels, Belgium. (2000).

[46]- M. Komp, Atmospheric corrosion ratings of weethering steels—calculation and significance. Mater. Performance, 26(7) (1987) 42-44.

[47]- M.S. Darmawan, A.N. Refani, M. Irmawan, R. Bayuaji, R.B. Anugraha, Time Dependent Reliability Analysis of Steel I Bridge Girder Designed Based on SNI T-02-2005 and SNI T-3-2005 Subjected to Corrosion. Procedia Eng., 54 (2013) 270-285. doi:10.1016/j.proeng.2013.03.025.

[48]- M. Secer, E.T. Uzun, Corrosion Damage Analysis of Steel Frames Considering Lateral Torsional Buckling. Procedia Eng., 171 (2017) 1234-1241. doi:10.1016/j.proeng.2017.01.415.

[49]- A. Kozlowski, R. Kowalczyk, M. Gizejowski. Estimation of the initial stiffness and moment resistance of steel and composite joints. in CTBUH 8th World Congress, Dubai. (2008).

[50]- P. Thoft-Christensen, M.J. Baker, Structural Reliability Theory and Its Applications. Springer Berlin Heidelberg: Berlin, Heidelberg. (1982). doi:10.1007/978-3-642-68697-9.

[51]- A.M. Hasofer, N.C. Lind, Exact and Invariant Second-Moment Code Format. J. Eng. Mech. Div., 100(1) (1974) 111-121. doi:10.1061/JMCEA3.0001848.

[52]- TCVN, Steel structures-Design standard, TCVN 5575–2012, Ministry of Construction Hanoi, Vietnam. (2012).