Technology acceptance model to analyze factors influencing intention to use bitcoin in Algerian context

Received: 01/12/2024; **Accepted:** 26/02/2025

Hadjer TROUDI [1*], Amani BENFARES [2]

1 Constantine 2 University Abdelhamid Mehri, Algeria, Hadjer.troudi@univ-constantine2.dz
2 Constantine 2 University Abdelhamid Mehri, Algeria, Amani.benfares@univ-constantine2.dz

Abstract

The purpose of this paper is firstly to support the adaptability of technology acceptance model in Algerian context and secondly to explore drivers of behavioral intention to adopt bitcoin. A framework based on TAM was proposed in order to explore intention to use bitcoin. The sample collected combines students from Constantine 2 compus and Constantine adherents of Algerian bitcoins' forum, for data analysis structural equation modeling approach was established via Amos 24 software. The findings show that construct was good model fit and can be applied to explain theory since the model was confirmed. Results indicate that intention to use bitcoin by Algerian user is mostly influenced by subjective norm contrarily to government regulation that shows a non-negative and a non-significant effect, intention is impacted by attitude which is affected positively by perceived usefulness and perceived ease to use, and negatively by compatibility. study gives better understanding for practitioners and researchers in practical way the importance level of several influencing factors studied that need to be considered for individual aging category 20-30 having knowledge about crypto-currencies in Algerian context.

Keywords

Acceptance technology model ;
Bitcoin ;
Subjective norm;
perceived usefulness;
perceived ease to use.

نموذج تقبل التكنولوجيا لتحليل العوامل المؤثرة على نية استخدام البيتكوين في الجزائر

ملخص

يتمثل الهدف الأساسي لهذه الورقة البحثية في أولا في التأكد من قابلية تطبيق نموذج نظرية تقبل التكنولوجيا في الجزائر من جهة، و من جهة ثانية بحث العوامل المؤثرة في النية السلوكية لاستعمال البيتكوين. تم اقتراح نموذج مفاهيمي قائم على نموذج نظرية تقبل التكنولوجي بغرض البحث في نية استعمال البيتكوين، تتكون العينة من جزئين، جزء يمثل طلبة جامعة قسنطينة 2 و جزء آخر يمثل منضمين لمنصات تبادل البيتكوين في الجزائر. بالنسبة الى تحليل البيانات، فقد تم تطبيق نمذجة المعادلات الهيكلية باستعمال برنامج AMOS 24. لقد بينت النتائج ان النموذج قد تمت مطابقته بشكل جيد و يمكن تطبيقه لإثبات الجزء النظري. كما قد اشارت النتائج الى ان النية في استعمال البيتكوين من طرف المستعمل الجزائري غالبا تتأثر بالمحيط الاجتماعي عكس القوانين الحكومية التي أظهرت الدراسة انها لها اثرا غير سلبي ولا دلالة إحصائية له، إن النية السلوكية لاستعمال البيتكوين حسب هذه الدراسة تتأثر بالموقف الذي يتأثر بدوره بشكل موجب بالمنفعة المدركة، و سهولة الاستعمال المدركة، كما ان الموقف حول استعمال البيتكوين يتأثر سلبا بمتغير التوافق، قدمت الدراسة فهما افضل للباحثين و المهتمين بطريقة عملية مستوى تأثير العوامل المؤثرة المدروسة و التي يجب اخذها بعين الاعتبار بالنسبة للفئة العمرية 20-30 و التي لدى أصحابها معرفة بالعملات المشفرة في الجزائر.

الكلمات المفتاحية

نموذج تقبل التكنولوجيا ؛
البيتكوين ؛
المحيط الاجتماعي ؛
المنفعة المدركة ؛
سهولة الاستعمال المدركة.

* *Corresponding author. E-mail:* Hadjer.troudi@univ-constantine2.dz
Doi:

© Constantine 1 University, Algeria, 2025.
E-ISSN: 2588-2007 ---Journal homepage: *http://revue.umc.edu.dz/index.php/h*

I- Introduction :

Many new technologies were created in the world since the use of internet has rapidly involved this last two decades, digital currencies are a part of this technological revolution in term of monetary transactions, crypto-currencies are digital currencies created on internet network by applying complicated cryptographic techniques (Nurgun and Hulya, 2018), Crypto-currencies can be used as an exchange medium in financial transactions. Crypto-money concept has started to take a place in the public press since 2013 (Athey et al. , 2016). There is currently more than 2067 crypto-currencies, The most famous ones traded in the world are bitcoin, ethereum, ripple, litecoin, (Jung et al., 2019), these famous ones are declared legal and traded in over 60 countries that includes several Muslim countries such as, UAE, Saudi Arabia, Jordan, Lebanon, Turkey, Indonesia, Malaysia, Kyrgystan (Ayedh et al., 2020).
The study is focusing on bitcoin, since it represents the worlds' first "decentralized anonymous organization"(Hsieh et al., 2018), bitcoins' name is a combination of "bit" that represents the small unit of data in computing, and the word "coin" (Leung and Dickinger, 2017). bitcoin was appeared in 2008, Satoshi Nakamoto was known as bitcoins' pseudo developer. it is acknowledged as a peer-to-peer electronical system of transactions (Gazali et al., 2018; Arias-Oliva et al., 2019), bitcoin practices network protocols called blockchain which is a kind of network mechanism that concedes the distribution of computing a number of nodes to agree new transactions periodically (Nurgun and Hulya, 2018), it is not insured by physical assets (Huang, 2019), major advantages of bitcoin use is the speed of transactions, its lower costs and better efficiency, these advantages provide a potential that can change traditional business means and that will make it possible to accelerate organizational process in several areas such as governance, entrepreneurship, supply chain management (Nadeem et al., 2020) , in February 2021 bitcoins' price reached 65.000US since it was 0.08 US in 2012, and 20000 US in 2017, its rise is rapid and huge, and its future evolution is unpredictable due to its adoption and regularization issues (Nadeem et al., 2020 by Hern, 2013; Shahzad et al., 2018).
Algerian government has decided to outright ban holding and all operations of virtual currencies as Bolivia, Bangladesh, Morocco and Ecuador, these countries prohibit the use of virtual currencies and qualify them as hidden currency . Algerian government explains the ban by the fact that these currencies are the prerogative of illegal transactions such as: money laundering; illegal transfer of currency; drug trafficking and financing of terrorism (Rabhi, 2018) , however these last year crypto-currencies had an image of decentralization and good means of financial transactions attracting a large audience across the world. Article 117 of the 2018 finance Algerian law specifies that virtual currency is characterized by lack of physical support, used by Internet users via the web, and is not regulated by a central bank or by financial institution; these currencies ensure a lack of traceability in transactions. Article 117 of the finance Algerian law of 2018 year warns that any user of crypto-currencies in Algeria will be punished according to the laws in force .
Despite of bitcoins' prohibition there is an emerging market of crypto-currencies in Algerian context in which various crypto-currencies are being traded throughout the day for the whole 24 h, there are some 300,000 daily transactions made by 60,000 users in Algeria (Belouar, 2017) , .
There is a huge number of theoretical and empirical studies that approach cryptocurencies, nevertheless Human-centered approaches in bitcoin studies are not many, few studies investigated user purchase intention of bitcoin (Nadeem et al., 2020), even fewer in contexts where crypto-currencies use is strictly prohibited and where crypto-currencies market may be not compatible with principles and religion of the population. The main value of this study is to give a structured application of psychological model based on TAM to identify and analyze intentions' drivers. Thus the study represents an addition to bitcoin literature since it is one of the pioneers assays to analyze the behavioral intentions of consumers toward using bitcoin, mainly its focus on a particular context, that gives it a distinctiveness in the literature, the study that can be explored for human-centered approach of bitcoin in similar contexts of it in part, and to analyze acceptance or rejections' crypto-currencies in other.
The study reveals a strategic approach of user intention by interrogating its determinants based on TAM, the framework applied might inspire studies that can be applied for other technologies innovation for investigate their acceptance or rejection in Algerian context and in similar contexts.

I.1 Technology acceptance model

Several models were proposed through last 30 years to analyze behavior and acceptance linked to TIC (Rahimi et al., 2018), the most famous theoretical model is theory of acceptance technology that was developed by Fred Davis in 1989 with the objective to shed light on psychological process of the acceptance of informations' technology (Jin et al., 2019).

The theory is reflected in a decision making system in model showing the adoption or not of a new technology (Folkinshteyn and Lennon, 2016). The theory of acceptance technology is an extension of theory of reasoned action that was developed by Izek Ajzen and Fishbein in 1975 and that explains psychological process of consumer behavior (Fishbein and Ajzen, 1975).

TAT shows the role of two variables: perceived usefulness and perceived ease to use as mediating variables in relation between external variables and psychological system of use (Marangunic and Granic, 2015).

Figure1. Original acceptance model

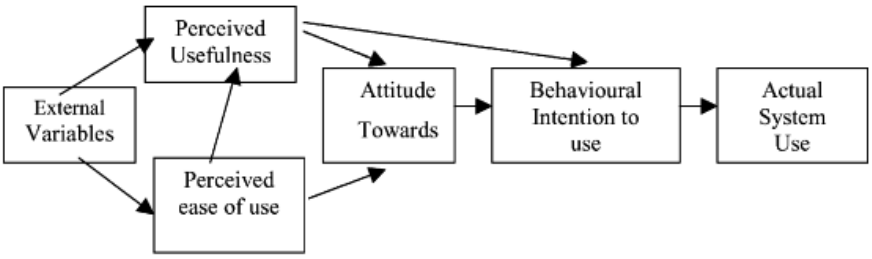

Source: Legrisa, P., Ingham, J. and Collerette, P. (2003).

TAM explains the motivation of users to adopt new technology by three factors; perceived usefulness, perceived ease of use, and attitude toward use, (Taherdoost, 2018). Generally, PEU and PU refer to the extent to which an individual believes that adopting new technology would be free of effort and improve job/ task performance. The attitude towards use is studied based on perceived risk (Mukabi and Long Vu, 2019).

TAT was widely applied in many framework (king and He, 2006), for its simplicity and comprehension, however it is still imperfect since other complementary variables can be supposed to be influencing factors according to other behavioral theories (king and He, 2006).

Figure2. Extension of TAM

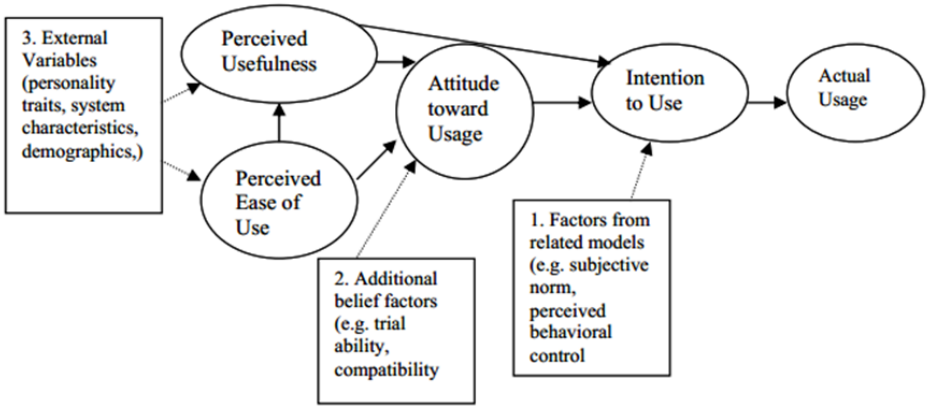

Source: Li, L. (2008).

I. 2. Literature review

The inclusion of factors suggested from other theories can improve the predictive power of MAT (Li, 2008), it's the reason why theory of acceptance and use was developed by Venkatesh, Michael, Gordon and Fred in 2003 that included the 4 other variables: social influence; facilitation conditions; performance expectancy and performance expectancy (Putra and Darma, 2019).

Acceptance technology model was applied on several academic studies to analyze crypto-money acceptance, notably bitcoin, The TAM is a valuable framework for continued analysis (Folkinshteyn and Lennon, 2016).

TAM in cryptocurrency

Arias-Oliva *et al*. (2019) study found that the most important factors of adopting crypto-ocurrency is performance expectancy, and that the perceived risk was not a significant factor having a negative effect on intention to use it, the sample was conducted among adults that are college educated in spainian context, however Folkinshteyn and Lennon (2017) study found advantages in using bitcoin such its free open source and transactions efficiency, and has risks as requirement of an efficient control to avoid security breaches for both developer and users, contrarily to Grover *et al.* (2019) study which found that users are attracted by security, transparency and trust, the acceptance technology drivers were identified in sample of blockchain users on twitter, Jung *et al.* (2019) conducted a comparative research between usage intention of crypto-currency among Korea china and Vietnam by applying unified TA and UT, Study add other independent variables such government regulation that developed the explanatory power of model, study shows the

important influencing role of GR in usage intention of crypto-currency, contrarily to the precedent study that did not include the government regulation which is an important antecedent especially for context where the state prohibit bitcoin using.
The study of Kern (2018) is based on TAM to analyze blockchain technology acceptance on young students and professionals, it showed that perceived risk was the most influencing factor among the three factors: PU; PEU and level of knowledge in predicting intension to use. Nuryev *et al.* (2018) found that financial risk, social risk and technological risk of bitcoin payment do not affect PU of it, nevertheless PEU is affected by convenient of payment and it's not affected by trust, in addition, intention to adopt crypto-currency payment is affected by all PU and PEU, authors applied TAM to examine factors influencing intention to adopt payment by crypto-currency in Taiwanese hotels context.

Mendoza-Tello (2019) applied a construct based on TAM to explore the role of distractive innovation in trust and acceptance by user in C2C e-commerce context, the results show that PU of using distractive innovation is the factor that determines strength three variables' effect: PR, perceived trust and PEU on intention to use crypto-currency. Gunawan and Novendra (2017) study in Indonesian context applied unified TA and TUT, the sample represents 49 respondents, multivariate regression was applied to identify which factors are the most influencing behavioral intention to use bitcoin, results show that performance expectancy and social influence affect greatly the behavioral intention for facilitation conditions and effort expectancy, but data was small and can't be generalized, contrarily to Putra and Darma (2019) study that have sample of 98 respondents and that authors used boostrap resampling technical to give more representatives to sample, the study applied model unified the TA and TUT like the precedent cited, contrarily to it this last included government regulation, and cyber security in addition and its results show that the government regulation and cyber security have a strong positive effect on behavioral intention to use bitcoin in Indonesian context, the implication of study was that the company should provide education and information about using crypto-currency and about regulation of it, however the study of Pakrou and Khademalizadeh (2016) that survey was conducted among graduate student in e-commerce from Allameh Tabatabai university of Teheran , Phd and master student in the computer science from Sharif university of technology in Teheran. Its results indicate that political and environmental factors do not affect the users' intention to purchase bitcoin, nevertheless cultural factors affect users' opinion, confidence, its education and Consciousness have a positive and statistically significant impact on intention of using crypto money via perceived value, while Iranian individuals of studys'sample are affected by their personal factors not environmental or governmental ones. agustina (2019) applied extended version of TAM to determine influence of using cryptocurrencys' antecedents in context of online trading on mobile application, results indicate that PEU is influenced by complexity, and PEU impacts perceived usefulness and attitude toward using online crypto-currency trading application ,however PU does not influence attitude toward using online crypto-currency, the sample is not enough representative, and it does not include some independent factors since the study was based on extended version of TAM, author add just complexity and trialability and did not include such variable like culture and SN. a survey was conducted by Baur et al. (2015) among three group using exploratory interview approach, the study explored SN, usefulness and usability as determinants, according to results, PEU is low comparing to PU in perception of most stakeholders.

Perceived usefulness

Jin and Khin (2019) has defined PU as degree of conviction that using a specific technology will inflate job performance, according to Baur the most PU is the lower cost of using crypto-currency in comparison with high transaction fees in using credit card. Baur *et al.* (2015) think that bitcoin is more suitable in emerging economies.

According to Arias-Oliva *et al.* (2019) PU is the variable having the most important impact on intention to use crypto-currency in case of electronic payment, as we formulate the following hypothesis:

H1: Perceived usefulness has a statistically significant positive effect on attitudes toward using bitcoin.

Perceived ease to use

PEU is a variable that can measure conviction of individual that using technology will be easy and free from effort (Grover et al., 2019; Li, 2008), well it can be considered like a personal perception of using technology without efforts, and that perception can have an effect on technology acceptance, as bitcoin adoption is considered as an innovation in computer science (kern, 2018).

Ibrahim Saleh *et al.* (2020) demonstrate that PEU has an influence on behavior of adopting crypto-currency, as the easiness reflects how deep users can conduct and manage its operations without affronting technical problem, and that has a significant effect on investing in bitcoin (Ayedh *et al.,* 2020), as acceptance technology model demonstrate that influencing factors impact final behavior indirectly, influence pass firstly through attitude, then intention (Ajzen, 1991) therefore, we formulate the hypothesis:

H2: Perceived ease to use has a statistically significant positive effect on attitude toward using bitcoin.

Perceived risk

Bauer Harvard scholar suggested definition of PR as seriousness and uncertainty of the result combination (Metin and Yakut, 2018)**,** according to Suprihandari et al. (2020) PR is an antecedent measure of psychological factors that influence purchasing decision. The perception risk can include all: security risk; financial risk; information risk; time risk; social risk; performance risk and psychological risk (Al-Amri *et al.,* 2019).

Li and Huang (2009) considered PR as an antecedent in TAM, Ibrahim Saleh *et al.* (2020) stated that price volatility and financial security issues can cause losses in crypto-currency transactions. The nature of crypto-currencys' transactions is intangible and cause uncertainty for consumer and conduct to a higher PR (Carmen, 2007).

Angerer *et al.* (2020) distingue two types of PR the objective ones are representation of reality, and subjective risks that are based on social constructions. Security of online shopping and privacy of personal information are two reasons that conduct consumer to not purchase on internet. Li and Huang (2009) Affirm that PR on service is riser than PR on goods.

Mitchell (1999) found the adoption and usage of crypto-currency needs a deep analysis of its PR (Angerer *et al.,* 2020) because it has a role to play in consumer buying behavior (Mitchell, 1992).

Kern (2018) concluded that PR reduce intention to use, thus, we formulate hypothesis:

H3: Perceived risk has a statistically significant negative effect on attitude toward using bitcoin.

Compatibility

According to Ayedh *et al.* (2020) compatibility is an important dimension in case of Muslim investors of bitcoin, study refers to compatibility of bitcoin with cultural and social values of investors, as religion, so using bitcoin for Muslim people must be compatible with Islamic principle of commerce.

Muslim people accord an important consideration to religion, wherever sharia represents pathways of Muslim perception of "human being and doing activities" like saying only truth (Ibrahim Saleh *et al.,* 2020).

According to Ajouz *et al.* (2019) customer should perceived bitcoin as a compatible currency with its sociocultural values and beliefs to invest it. If it is perceived Compatible, this last will have a positive effect on its adoption.

According to Meera (2018) currency must adhere to some criteria to play an effective and efficient role as money, two of these are acceptance and stable value, well money value must be relative to their things, and money having no intrinsic value is forced upon individuals by financial law's government.

Referring to Adam (2018) it's difficult to agree that bitcoin is currency that adheres completely to Islamic law because of some reasons, such as its fails to uphold wealth rules in Shariah because since in Islamic finance the asset back transactions must be invested in durable and real asset, in addition of number of risks associated to bitcoin money using it can be considered lawful (Abubakar and Saidi, 2018) due the fact that it could be calcified like digital asset having value, however issuance of this crypto-money is not by state ant it is not controlled by responsible, thus it can be used as a payment mean of illegal transactions and that can have a negative impact on people and stats 'economy (Nurhisam, 2017), whereas Ayedh *et al.* (2020) found in their study that compatibility of using crypto-currency to religious values and affiliation of Malaysian Muslim investor have a significant positive effect on using intention of crypto-currency, therefore we formulate hypothesis:

H4: compatibility of using bitcoin to religious values and affiliation of Algerian has a significant positive effect on attitude toward using bitcoin.

Government regulation

GR is the policies and lows that cover the adoption of crypto-currencies and this regulatory support defines whether government allows citizens to adopt or not crypto-currencies (Wong *et al.,* 2020), Jung *et al.* (2019) agree that government regulation can be caracterised by protective regulations that implies methods protecting individuals.

According to Clohessy *et al.* (2020) GR represents regulatory environment and it has a significant importance as it can impact the information technology, the lack of predictable legal information make a sever barrier to users for crypto-currencies adoption.

Kouhizadeh *et al.* (2020) found government can prohibit crypto-currency adoption, in addition even in case of adoption of new systems, it will require to replace legacy system.

In Indonesian context, according to Indonesian bank bitcoin is not feasible as a legal means of payment, and that is according to several lows concerning currency (Putra and Darma, 2019), thus government regulation can affect negatively intention to use bitcoin.

In Algerian context, article 113 of finance low 2018 stipulate "purchase, sale, use and possession of virtual currency are prohibited" and any breach of this layout leads to the application of article "is punished in accordance with laws and

regulations" (Rabhi, 2018). Thus in Algerian context any use and possession of all crypto-currencies is prohibited. So we formulate the following hypothesis:

H5: Government regulation has a statistically significant negative impact on intention to use bitcoin in Algerian context

Social influence

SI is a kind of social pressure that lead individual to engage in some behavior (Troudi and Bouyoucef, 2020) it can be defined as perceived pressure from references' group such as family, friend colleagues to perform or not a behavior (Ajzen, 1991), it is a function of beliefs showing perception of most important persons on a specific behavior (Gazali *et al.,* 2018).

In term of reasoned action theory of Ajzen SI is represented by the subjective norm (ajzen,1971), which is set of beliefs that represent opinions and perception of the most important people think that he should perform a kind of behavior (Gazali *et al.,* 2018) , it's a normative convictions of references or groups (ajzen, 1991) well, it can be defined as a kind of social pressure on individual to engage in behavior with group behavior, as friends or family behavior (Troudi and Bouyoucef, 2020).

SN represents the second antecedent of intention, it is related to beliefs about descriptive and prescriptive norms about doing behavior in vision of social group (Mazambani and Mutambara, 2020).

Gazali *et al.* (2018) affirm that SN can lead to intention to use bitcoin as important people for individual are doing; it can also lead to feeling safe by most of people investing in crypto-currencies due to her mentality. So we formulate the two hypotheses:

H6: subjective norm have a statistically significant positive impact on intention to use bitcoin in Algerian context

H7: Positive Attitude toward using bitcoin has a statistically significant positive impact on intention to use bitcoin in Algerian context.

figure3. Conceptual framework

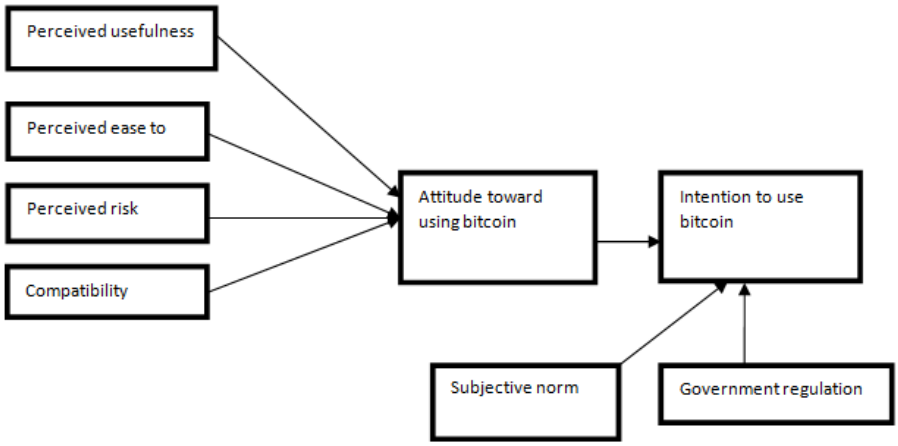

Source: conceptual framework was schematized by researchers.

II– Methods and Materials:

II .1 Study instrument

The questionnaire includes 2 parts, one contained social information, the second contains several items to evaluate study variables. We applied five point likert scale to evaluate items (1-strongly disagree to 5-strongly agree).

Measurement items of questionnaire were adapted from literature.

Table1. Scales of study

scale	source
Perceived ease to use	(Kern, 2018)
Perceived usefulness	(Mendoza-Tello, 2019)
Perceived risk	(Arias-Oliva *et al.,* 2019)
compatibility	(Ayedh *et al.,* 2020)
attitude	(Alaeddin and Altounj, 2018)
Government regulation	(Wong *et al.,* 2020)
Subjective norm	(Mazambani and Mutambara, 2020)
intention	(Abraham *et al.,* 2019)

Source: scales of study were adapted referring to studies in table above.

Sample and data collection

Survey was established in Algerian context, in Constantine town called east capital of Algeria through 7 months, from October 2020 to April 2021. The sample was collected on two steps, in first, a sample was collected from Constantine2 campus students, all students respondents are affiliate to economic faculty of Constantine2 campus. The second step an electronic version of questionnaire was diffused in Algerian crypto-currencies forum on facebook, we selected respondents resident in Constantine town to not limit sample in student category.

We collected 236 respondents who have knowledge about crypto-currencies whether from economic studies in economic faculty for respondents who are students or from general culture for other respondents.

Table2. Sample presentation

		frequency	Percentage
gender	Male	101	42,8%
	female	135	57,2%
Age	20-30 years	176	74,6%
	31-40 years	52	22%
	41-50 years	8	3,4%
Occupation sector	student	99	42%
	unemployed	19	8%
	business	32	13,5%
	education	37	15,7%
	bank	8	3,5%
	Public administration	41	17,3%

Source: informations of sample collected by survey.

Data analysis

We applied structured equation modeling SEM, estimated model was statistically validated through FCA factorial confirmatory analysis.

Data analysis was established via 2 steps, first approach was developing measurement model, then testing validity. Instrument validity was confirmed by calculating cronbachs' Alpha using SPSS 24 software. Maximum likelihood estimation model was applied to evaluate measurement via AMOS 24 software. The second step was testing hypothesis through structured model that show quantitative evaluation of several direct and indirect relationships between variables.

II.2 Evaluation of measurement model

CFA of model was applied through verification of model's factorial validity by apply maximum likelihood method using AMOS 24 software.

Figue.4 model proposed by AMOS 24 software

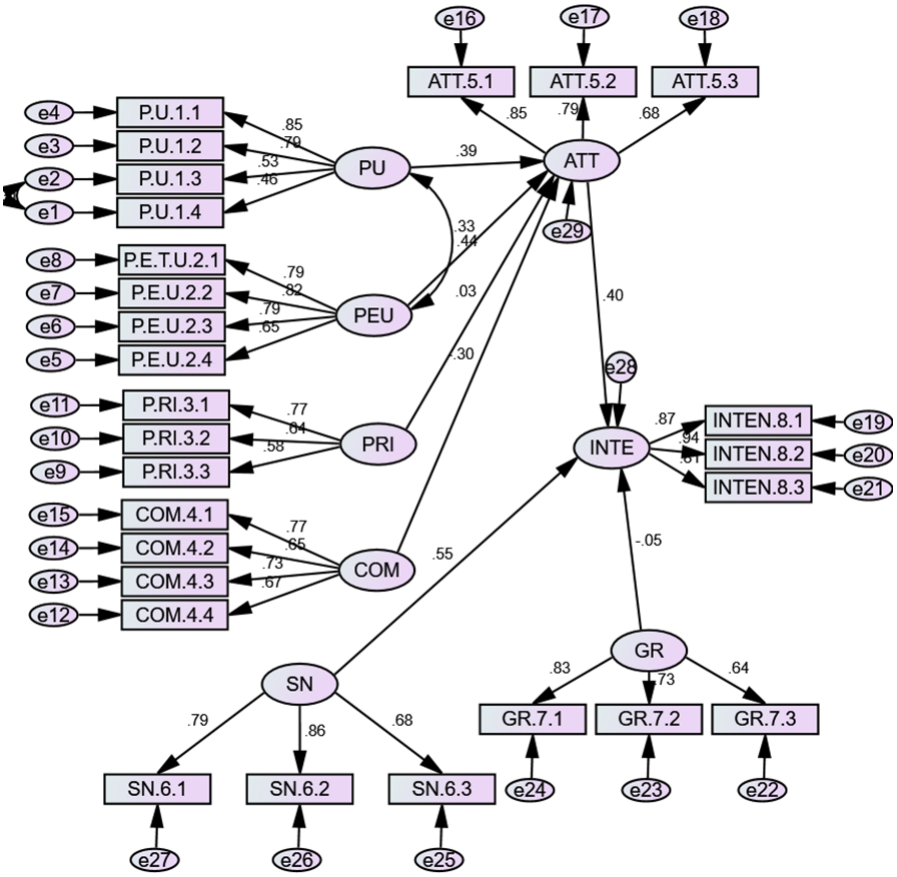

Source : outputs AMOS 24 software

The estimate of the model

Table3. Goodness of fit model

Index cathegory	index	value	Acceptability condition
Absolute index	Cmin	666.304	
	FD	315	
	REMSA	0.069	Excellent in the case o0.06 Acceptable if the value is between 0.05 and 0.08
	P	0.000	
	GFI	0.828	From 0 to 1 More the value is approximate to 1. The adequacy is excellent
	AGFI	.793	
Incremental index	CFI	0.878	
	NFI	0.794	
	TLI	0.865	
Parsimony index	Cmin /FD	2,115	<5

Source : outputs AMOS 24 software.

Table shows reliabilities index calculated by AMOS 24 software, indexes show acceptability of the model.

Reviewing reliability and validity of the construct

Internal Consistency Reliability

We use cronbach's alpha index to calculate relibility's consistency of model via AMOS 24.

Table4. Cronbachs'α coefficient

Variable	Cronbachs' α
Perceived usefulness	0,770
Perceived ease to use	0,846
Perceived risk	0,699
compatibility	0,799
Attitude toward using betcoin	0,822
Subjective norm	0,817
Government regulation	0,773
Intention to use betcoin	0,914

Source : outputs SPSS 22 software.

Table 4 shows that All cronbach's aplha value tends between 0.6 and 0.9 therefore, the questionnaire is reliable to conduct a survey.

Convergent validity of construct

Scalar Estimates Maximum Likelihood (Group number 1 - Default model)

Table5. Regression Weights: (Group number 1 - Default model)

			Estimate	S.E.	C.R.	P
ATT	<---	PU	.727	.170	4.272	***
ATT	<---	PEU	.414	.098	4.206	***
ATT	<---	PRI	.039	.087	.442	.658
ATT	<---	COM	-.340	.079	-4.316	***
INTE	<---	ATT	.489	.077	6.330	***
INTE	<---	SN	.767	.104	7.409	***
INTE	<---	GR	-.092	.103	-.894	.371

Source : outputs AMOS 24 software.

The table shows weight of each factor in its latent variable, factor loading of PU in attitude is 0.727 which is greater than 0.3, its regression weight is strong, and it's statistically significant, standardized degree of loading

Concerning latent variable attitude, its most loading factors is PU, its degree of loading is estimated 0.727, and its weight is statistically significant P<0.05.whereas the least loading factors of attitude is PR 0.039 loading degree, its weight is statistically not significant p= 0.658, thus it does not load attitude variable. In middle, the loading degree of PEU in attitude latent variable is 0.414 and it's significant statistically P<0.05. Regression weight of compatibility is 0.34, it have a negative loading, and it is statistically significant P<0.05.

The most loading factor of intension latent variable is SN, its degree of loading 0.767 its regression weight is statistically significant P<0.05, however GR have the smaller negative regression weight in intention 0.92 degree, it's statistically not

significance P=0.371>0.05, attitude is a medium factor loading of intension with a weight 0.489, statistically significant P<0.05.

Convergent validity of variables

Maximum Likelihood Estimates

Table6. Regression Weights: (Group number 1 - Default model)

			Estimate	S.E.	C.R.	P
P.U.1.4	<---	PU	1.000			
P.U.1.3	<---	PU	1.108	.167	6.642	***
P.U.1.2	<---	PU	1.672	.256	6.526	***
P.U.1.1	<---	PU	1.685	.257	6.552	***
P.E.U.2.4	<---	PEU	1.000			
P.E.U.2.3	<---	PEU	1.233	.126	9.765	***
P.E.U.2.2	<---	PEU	1.343	.134	10.031	***
P.E.U.2.1	<---	PEU	1.271	.131	9.738	***
P.RI.3.3	<---	PRI	1.000			
P.RI.3.2	<---	PRI	.934	.145	6.438	***
P.RI.3.1	<---	PRI	1.324	.218	6.065	***
COM.4.4	<---	COM	1.000			
COM.4.3	<---	COM	1.134	.127	8.908	***
COM.4.2	<---	COM	1.047	.128	8.158	***
COM.4.1	<---	COM	1.276	.139	9.174	***
ATT.5.1	<---	ATT	1.000			
ATT.5.2	<---	ATT	.911	.073	12.502	***
ATT.5.3	<---	ATT	.812	.076	10.689	***
INTEN.8.1	<---	INTE	1.000			
INTEN.8.2	<---	INTE	1.070	.055	19.313	***
INTEN.8.3	<---	INTE	.940	.059	15.813	***
GR.7.3	<---	GR	1.000			
GR.7.2	<---	GR	1.240	.149	8.309	***
GR.7.1	<---	GR	1.352	.168	8.065	***
SN.6.3	<---	SN	1.000			
SN.6.2	<---	SN	1.244	.120	10.375	***
SN.6.1	<---	SN	1.190	.117	10.134	***

Source : outputs AMOS 24 software.

The table shows weight of items on its factor, all degree's factor loading shown are superior than 0.7, all regression weights are statistically significant P<0.05 which prove convergent validity of construct.

Table7. Covariances: (Group number 1 - Default model)

	Estimate	S.E.	C.R.	P
PU <--> PEU	.181	.045	4.061	***
e1 <--> e2	.304	.073	4.188	***

Source : outputs AMOS 24 software.

The covariance between independent variables existent in construct is between two variables PU and PEU, its coefficient value is 0.181, whether coefficient is positive, the two variables tend to rise together. To calculate importance of linear relation between the two variables we calculate correlation between them in table below.

Table8. Correlations: (Group number 1 - Default model)

	Estimate
PU <--> PEU	.438
e1 <--> e2	.312

Source : outputs AMOS 24 software.

Coefficient correlation between PU and PEU is 0.438 it's a medium correlation, it's statistically significant P<0.05, while the two independent contribute together to determine causal path of attitude variable.

Hence data adequately fit measurement model; we pass to evaluating the structural model.

II.3 Evaluation of structural model

We measure structural model through analyzing several standardized direct and indirect effects as shown in table below:

Table.9 Standardized Total Effects (Group number 1 - Default model)

	SN	GR	COM	PRI	PEU	PU	ATT	INTE
ATT	.000	.000	-.299	.030	.327	.393	.000	.000
INTE	.553	-.054	-.119	.012	.130	.156	.398	.000

Source : outputs AMOS 24 software.

The table shows the total standardized effect between the independent variables and dependent ones.

We deduce different causal paths arising from different direct and indirect effects derived from model,

PU have a positive strong direct and statistically significant effect on attitude estimated 0.393, PU impacts also the intension positively by an indirect effect trough attitude as an intermediate variable, this indirect weak effect is estimated 0.156. Total effect represents the first causal track. The second causal path starts from PEU that impacts positively all attitude and intention, first attitude by a medium direct effect estimated 0.327, this is statistically significant P<0.05. Secondly PEU have a positive weak indirect effect on intention via attitude.

The effect manifests in third causal tack by PR is weak and statistically not significant P>0.05, the first impact is on attitude is positive estimated 0.30 which is weak effect, and the second indirect effect on intention via attitude is estimated 0.012, as 0.012>0.02 we deduce that there is no indirect effect on intention via attitude.

Compatibility started from fourth causal path, it has a negative statistically significant impact on attitude estimated -0.299 which is a medium effect, subsequently compatibility has an indirect negative effect on intention via attitude this indirect effect is weak estimated -0.191. All rest of paths contain only direct effects. Fifth causal track begins from GR that has a direct negative and weak impact on intension -0.054 that is statistically not significant. The sixth causal track starts from SN that impacts positively intension estimated 0.553, it is statistically significant P<0.05.

III- Results and discussion

according to statistical effects indicated above:

Table10. Results

H1	Perceived usefulness has a significant positive statistical effect on attitude toward using bitcoin	**validated**
H2	Perceived ease to use has a statistically significant positive effect on attitude toward using bitcoin	**validated**
H3	Perceived risk has a statistically significant negative effect on attitude toward using bitcoin	**Rejected**
H4	Compatibility of using bitcoin to religious values and affiliation of Algerian has a significant positive effect on attitude toward using bitcoin.	**Rejected**
H5	Government regulation has a statistically significant negative impact on intention to use bitcoin in Algerian context.	**Rejected**
H6	Subjective norm have a statistically significant positive impact on intention to use bitcoin in Algerian context.	**Validated**
H7	Positive Attitude toward using betcoin has a statistically significant positive impact on intention to use bitcoin in Algerian context.	**validated**

Source : results were found as the study progressed.

H1: PU has a significant positive statistical effect on attitudes toward using bitcoin cryptomoney.

We validated the hypothesis above , PU have a strong effect 0.393 on attitude toward using bitcoin, this effect is statistically significant, it has therefore in indirect impact on intension to use bitcoin. This reflects that consumer PU positively, while he perceives that using bitcoin can allow him: to send money rapidly and everywhere in a low coast, he perceives that it allow him to approve his profitability, and to have a total control of his money. This perception has a strong positive effect on his attitude towards bitcoin using, PU is factor having the most impact on attitude toward using bitcoin in study ; PU is the strongest predictor of attitude toward using bitcoin. the same result of Arias-Oliva *et al.* (2019) and Baur *et al.* (2015). Contrarily to the results of Lee (2009) that PU has no significant effect on intention to use crypto-currency in Korean context.

H2: PEU has a statistically significant positive effect on attitude toward using bitcoin.

We validated the second hypothesis, PEU impacts positively attitude toward using bitcoin 0.327 impact is statistically significant. thus PEU impact intension to use bitcoin with indirect effect 0.130, while we found that consumer PEU bitcoin positively, consumer find it easy to learn using, to buy and to use, Result is similar to result of Kern (2018) who found moderate positive effect of PEU on intension to use crypto-currency in Spain context study and study of Ibrahim Saleh *et al.* (2020) found positive effect of PEU, contrarily to results of Jackson *et al.* (1997) and Lucas and Spitler (1999) cited by Li (2008) that found no significant impact of PEU on attitude, moreover study of Bajaj and Nidumoulu (1998) cited by Long Li (2008) found negative effect of PEU on attitude. PU can be raised among consumers by companies which should develop its practical world application (Kern 2018).

H3: PR has a statistically significant negative effect on attitude toward using bitcoin crypto-money.

We rejected hypothesis above, PRI have no direct negative effect on attitude, even its indirect effect on intension to use bitcoin that was developed by SEM is not negative, total effect on attitude is statistically not significant P>0.05. PRIs' impact on attitude toward using bitcoin is the weakest effect on attitude among all other factors analyzed in study, despite consumer of study context knows that it's not a legal currency and that represents risk in addition of risk of bitcoins' volatility. Moreover, consumer perceives risk of being victim of cyber-attack and piracy, nevertheless PR did not affect attitude towards bitcoin, while consumer does not implied negative PR on its attitude of using bitcoin, we found that PRI have the weakest impact on attitude, contrarily to kern (2018) results that found PRI the most impactful variable in predicting TA for using crypto-currency, in addition Pelaez *et al.* (2017) found TRI play a critical negative role in predicting intention, Lee (2009) divided PR on his study on five risks: performance risk, time risk, social risk, security risk, and financial risk, to identify deeply risks characteristics perceived by consumer in using online banking . The study found different impacts degree on attitude, the study applied ATM on using service banking, Mai *et al.* (2020) found that

users have just basic understanding of crypto-currencies system, and have poor about prevention mechanism. Gazali *et al.* (2018) linked risk of using bitcoin with its volatility's price and lack of control on its exchanges. Angerer *et al.* (2020) literature study divided risks on objective ones and subjective ones.

H4: compatibility of using bitcoin to religious values and affiliation of Algerian has a significant positive effect on attitude toward using bitcoin.

We rejected the fourth hypothesis, we found that compatibility of using bitcoin with religious values and affiliation have negative direct impact on attitude toward using bitcoin -0.299, it's statistically a significant effect, the structural model developed indirect effect on intension to use bitcoin, this indirect impact is negative -1.66 and it's statistically significant. The consumer of study context perceives in majority bitcoin as currency which is not compatible with principles' Islam as long as : it does not have physical form and exist only on a network; it does not have an intrinsic value; the possibility of its application on counterfeit and money laundering since it's not under stat's control. This perception is similar to study of Adam (2018) that deduced that bitcoin is more considered as an investment than a medium of exchange, , which leads to risks and that is not compatible with Islamic finance law. according to Nurhisam (2017) using bitcoin can occur harm for people and economy as possibility of counterfeiting, inflation of its value that can cause loss to people who has fixed income from it, since bitcoin is not controlled by state there is risk in case of security, consequently it does not bring benefit to community and should be abandoned, study of Adeoye *et al.* (2018) explored Muslims' scholar views in case of legality of bitcoin in islam religion, study found a part of studies who considered bitcoin against Islamic principles and rejected it, other part of studies considered that if using bitcoin will be with certain conditions it will not be in contradiction with Islamic principles, Adeoye *et al.* (2018) resumed elements that makes bitcoin rejected in point of view of islam as long as it does not have an intrinsic value, and considered as a type of gambling, in addition miners try to mathematical puzzle to create betcoin, Ibrahim Saleh *et al.* (2020) study found islam compliance positively associated with behavioral intention to use crypto-currency, this positive effect is due to Fatwa's centre role in fit crypto-currency, that explains the result of Ayedh *et al.* (2020) that found positive statistically significant impact of compatibility on intention to adopt crypto-currency by Malaysian Muslim investors, that explains result of Ajouz *et al.* (2019) that found a positive effect of compatibility on intention to use crypto-currency.

H5: GR has a statistically significant negative impact on intention to use bitcoin in Algerian context.

We rejected this hypothesis, since GR have direct negative impact on intention to use bitcoin, but this impact is weak and statistically not significant, negativity of effect is explained by the fact of crypto-currencies' interdiction adoption by Algerian authorities, respondents sample know in majority that there is no law protecting crypto-currencies in Algeria, despite of interdiction of crypto-currencies and the lack of protecting law of its users, respondents intention to use bitcoin is not affected by that negative effect, since effect is weak, and users are willing to use bitcoin despite its interdiction, this result is in contrast with (Wong et al., 2020) study concluding that usage of crypto-currency depends on regulation environment, for instance in US bitcoin is accepted as payment method (Folkinshteyn and Lennon, 2017; Duan *et al.,* 2020) as in UK (Woodside *et al.,* 2017), nevertheless to Indonesian context in which bitcoin is not considered as payment instrument (Putra and Darma, 2019).

regulatory interdiction of bitcoin for transactions in country can cause severe barriers for its adoption (Clohessy *et al.,* 2020; Angelis and Da Silva, 2019) lack of governmental policies is one of prominent barrier to adopt crypto-currency (Kouhizadeh *et al.,* 2020). As Regulatory uncertainties is considered as a challenge variable for adoption of crypto-currency (Wong *et al.,* 2020).

A random among Vietnam korea and china was conducted by Jung *et al.* (2019) and that conclude that GR impacts negatively SI in korea since korean government advised people to not use crypto-currencies, nevertheless Vietnamian government didn't restrict or warn crypto-currencies using.

H6: SN has a statistically significant positive impact on intension to use bitcoin in Algerian context

We validated the sixth hypothesis since we SN have a direct strong positive and statistically significant effect on intention to use bitcoin 0.553 this is the strongest factor influencing intention to use bitcoin in study, contrarily to Ayedh *et al.* (2020) that found no significant impact on intention to invest in bitcoin market due to lack of knowledge about crypto-occurencies in communities where there is a problem of compatibility with Islamic principles, other studies found that influence of SN on crypto-currency adoption is negative and non-significant as Mazambani and Mutambara (2020). Gunawan and Novendra (2017) found that SN have insignificant effect on intention contrarily to Gazali *et al.* (2018) who affirm SN can lead to intention to use bitcoin.

H 7: Positive Attitude toward using bitcoin has a statistically significant positive impact on intension to use bitcoin in Algerian context.

The hypothesis above was validated, attitude toward using bitcoin has a positive statistically significant effect on intention to use bitcoin, effect is 0.308. this result is similar to Mazambani and Mutambara (2020) that found a positive strong effect of attitude on intention 0.76 in south Africa, the study apply Theory of planned behavior, Lee (2009) and of Anser *et al.* (2020) apply TBP found an impact of attitude on intention estimated 0.25, similarly the TRA of Ajzen and Fishbein

(1975) suggests and validates impact of attitude on intention , and considers intention as intermediate variable between attitude and final behavior, both the two theories aim to investigate the impact of external variables on intention and action (Roos, 2015).

IV- Conclusion:

We confirmed via this study for the first time the applicability of acceptance technology model to analyze the intention's antecedents for crypto-currency in Algerian context in where the use of all types of crypto-currencies is strictly forbidden. SEM has shown several effects of influencing factors on intention to adopt crypto-currency through explanatory power of TAM, driver having the most power predicting intention to use bitcoin was the SN.

Results shown that Algerian consumer is more affected by his relatives than other factors, due to the fact that there is no information resources about crypto-currencies adoption except "word of mouth» the most influencing factor is SN. despite of crypto-currencies use interdiction, this last affected intention to use bitcoin in a very weak effect, and this explains preferences 'individual to be influenced by his close surround than having intention to be in compliance with law by respondents' study.

The second key driver of behavioral intention to adopt bitcoin was attitude, which is influenced by PU that can be perceived as alternative solution to save money from economic downturn and inflation.

PR does not affect attitude negatively this explains that respondent study are not afraid from several risks in using bitcoin, but factor that can stop consumer is compatibility, results show a strong negative impact of compatibility on attitude toward using bitcoin, this demonstrate that respondents are mostly effected by SN than by PU and PEU, after this two variables respondents are influenced by compatibility with Islamic principles mostly, and he is not affected by PR and GR, thus respondents accord great importance to opinion of those who are close to them, and adheres to Islamic principles.

References:

[1]. Abraham, J., Sutiksno, D.U., Kurniasih, N. and Warokk, A. (2019), "Acceptance and Penetration of Bitcoin: The Role of Psychological Distance and National Culture", journals.sagepub.com/home/sgo, https://doi.org/10.1177/21582440198658.

[2]. Abubakar, Y.S., Ogunbado, A.F. and Saidi, M.A, "Bitcoin and its Legality from Shariah Point of View", SEISENSE Journal of Management, V. 1, N. 4, (2018), pp. 13-21.

[3]. Adam, M.F, "Bitcoin: Shariah Compliant?", Amanah Finance Consultancy Ltd, . (2018), pp. 1-54.

[4]. Adeoye, Y.M., Oluwole, A.F. and Blessing, L.A, "Appraising the role of information communication technology (ICT) as a change agent for higher education in Nigeria", International Journal of Educational Administration and Policy Studies, V. 5, N. 5, (2018), p. 177-183.

[5]. Agustina, D, « Extension of Technology Acceptance Model (Etam): Adoption of Cryptocurrency Online Trading Technology", Jurnal Ekonomi, V. XXIV, No. 02, (2019), pp. 272-287.

[6]. Ajouz,M., Abdullah, A. and Kassim, S, "Acceptance of Sharīʿah-compliant precious metal-backed cryptocurrency as an alternative currency: An empirical validation of adoption of innovation theory", Thunderbird Int. Bus, (2019), pp. 1-11.

[7]. Ajzen, I, "attitudinal vs. normative message: an investigation of the differential effects of persuasive communications on behavior", sociometry, V. 34, N. 2, (1971), pp. 263-280.

[8]. Ajzen, I, "The theory of planned behavior", Organizational and Human Decision Processes, Vol. 50 No. 2, (1991), pp. 179-211.

[9]. Alaeddin, O. and Altounj, R, "Trust, Technology Awareness and Satisfaction Effect into the Intention to Use Cryptocurrency among Generation Z in Malaysia", International Journal of Engineering & Technology, V. 7, N. 4, (2018), pp. 8-10.

[10]. Al-amri, R., Habbal, A., zakaria, N.H. and Hassan, S, "Cryptocurrency adoption: current stage, opportunities, and open challenges", International Journal of Advanced Computer Research, V. 9, N. 44, (2019), pp. 292-307.

[11]. Angelis, J. and da Silva, E.R, "Blockchain adoption: A value driver perspective", Business Horizons, 62, (2019), pp. 307-314.

[12]. Angerer, M., Hoffmann,C., Neitzert, F. and Kraus, S. (2020), "Objective and Subjective Risks of Investing into Cryptocurrencies", Finance Research Letters, doi: https://doi.org/10.1016/j.frl.2020.101737 .

[13]. Anser, M.K., Zaigham, G.H.K., Rasheed, M.I., Pitafi, A.H., Iqbal, J. and Luqman, A, "Social media usage and individuals' intentions toward adopting Bitcoin: The role of the theory of planned behavior and perceived risk", International Journal of communication system, (2020).

[14]. Arias-Oliva.M., Pelegrín-Borondo.J. and Matías-Clavero.G, "Variables Influencing Cryptocurrency Use: A Technology Acceptance Model in Spain", Frontiers in Psychology, V. 10, N. 475, (2019), pp. 1-13.

[15]. Athey, S., Parashkevov, I., Sarukkai, V. and Xia, J, "bitcoin pricing, adoption, and usage: theory and evidence", Working Paper No. 17-033, (2016), institute for economic policy research (SIEPR), Stanford.

[16]. Ayedh, A., Echchabi, A., Battour, M. and Omar, M. (2020), "Malaysian Muslim investors' behaviour towards the blockchain-based Bitcoin cryptocurrency market", Journal of Islamic Marketing, DOI 10.1108/JIMA-04-2019-0081 .

[17]. Baur, A.W., Bühler, J.,Bick, M. and Bonorden, C.S. (2015), "Cryptocurrencies as a Disruption? Empirical Findings on User Adoption and Future Potential of Bitcoin and Co", International Federation for Information Processing, pp. 63-80.

[18]. Carmen, P.C, "Perceived risk on goods and service purchases". EsicMarket, 129, (2007), pp. 183-199.

[19]. Clohessy, T., Treiblmaier, H., Acton, T. and Rogers, N, "Antecedents of blockchain adoption: An integrative framework", Strategic Change, 29, (2020), pp. 501–515.

[20]. Duan, J., Zhang, C., Gong, Y., Brown, S. and Li, Z. (2020), "A Content-Analysis Based Literature Review in Blockchain Adoption within Food Supply Chain", International Journal of Environmental Research and Public Health, doi: 10.3390/ijerph17051784 .

[21]. Fishbein, M. and Ajzen, I, Belief, Attitude, Intention, and Behavior: An Introduction to Theory and Research, Addison-Wesley, Reading, MA, (1975).

[22]. Folkinshteyn, D. and Lennon, M.M, "Braving Bitcoin: A technology acceptance model (TAM) analysis", Journal of Information Technology Case and Application Research, V. 18, NO. 4, (2017), pp. 220–249.

[23]. Gazali, H.M., Bin Che Ismail, C.M.H. and Amboala, T, "Exploring the Intention to Invest in Cryptocurrency: The Case of Bitcoin", International Conference on Information and Communication Technology for the Muslim World, conference publishing service, DOI 10.1109/ICT4M.2018.0002, (2018), pp. 64-68.

[24]. Grover, P., Kar, A.K., Janssen, M. and Ilavarasan, P.V, "Perceived usefulness, ease of use and user acceptance of blockchain technology for digital transactions – insights from user-generated content on Twitter", enterprise information systems, V. 13, N. 6, (2019), pp. 771–800.

[25]. Gunawan, F.E and Novendra, R, "an analysis of bitcoin acceptance in Indonesia", ComTech, Vol. 8, No. 4, (2017), pp. 241-247.

[26]. Hadj Ali, S. (2018) https://www.elwatan.com/edition/economie/les-crypto-monnaies-indesirables-en-algerie-12-02-2018 (accessed 27december 2020).

[27]. Hsieh, Y.Y., Vergne, J.P., Anderson,P., Lakhani, K. and Reitzig, M, "Bitcoin and the rise of decentralized autonomous organizations", Journal of Organization Design, V. 7,N. 14, (2018).

[28]. Huang,w, "The impact on people's holding intention of bitcoin by their perceived risk and value", Economic Research-Ekonomska Istraživanja, V. 32, N. 1, (2019), pp. 3570-3585.

[29]. Ibrahim Saleh, A.A., Ibrahim, A.A., Noordin, M.F. and Mohadis, H.M, "Factors Influencing Adoption of Cryptocurrency-based Transaction from an Islamic Perspective", Global Journal of Computer Science and Technology: G Interdisciplinary, V. 20, N. 4, (2020), pp. 20-32.

[30]. Jin, C.C., Seong, L.C. and Khin, A.A, "factors affecting the consumer acceptance towards fintech products and services in Malaysia", international Journal of Asian Social Science , Vol. 9, No. 1, (2019), pp. 59-65.

[31]. Journal avocat algérien https://avocatalgerien.com/cryptomonnaie-pourquoi-lalgerie-a-interdit-lusage-du-bitcoin/ (accessed 27december 2020).

[32]. Jung, K.J., Park,J.B., Phan,N.Q., Bo, C. and Gim, G.Y. (2019), "An International Comparative Study on the Intension to Using Crypto-Currency", Business Administration, Soongsil University, Seoul, Korea, pp. 104–123. https://doi.org/10.1007/978-3-319-98370-7_9

[33]. Kern, A, "blockchain technology: a technology acceptance model (TAM) analysis", MSc dissertation in business, Catolica-Lisbon-, school of business & economy, (2018).

[34]. King, w.R. and He,J, "A meta-analysis of the technology acceptance model", Information & Management, 43, (2006), pp. 740–755.

[35]. Kouhizadeh, M., Saberi, S. and Sarkis, J. (2020)," Blockchain technology and the sustainable supply chain: Theoretically exploring adoption barriers", International Journal of Production Economics, https://doi.org/10.1016/j.ijpe.2020.107831 .

[36]. Lee, M.C, « Factors influencing the adoption of internet banking: An integration of TAM and TPB with perceived risk and perceived benefit", Electronic Commerce Research and Applications, 8, (2009) ,pp. 130-141.

[37]. Legrisa, P., Ingham, J. and Collerette, P, "Why do people use information technology? A critical review of the technology acceptance model », Information & Management, V. 40, (2003), pp. 191–204.

[38]. Leung, D. and Dickinger, A, "Use of bitcoin in Online Travel Product shopping: The Eeuropean Perspective", Information and Communication Technologies in Tourism, DOI 10.1007/978-3-319-51168-953 , (2017), pp. 741-754.

[39]. Li, L, "A Critical Review of Technology Acceptance Literature", Referred Research Paper, Department of Accounting, Economics and Information Systems, College of Business, Grambling State University, (2008).

[40]. Li, Y.H. and Huang, J.W, "Applying Theory of Perceived Risk and Technology Acceptance Model in the Online Shopping Channel",World Academy of Science, Engineering and Technology, 53, (2009), pp. 919-925.

[41]. Mai, A., Pfeffer, K., Gusenbauer, M., Weippl, E.,Krombholz, K, « User Mental Models of Cryptocurrency Systems - A Grounded Theory Approach", *Symposium on Usable Privacy and Security (SOUPS)*. August 9–11, 2020, Virtual Conference.

[42]. Marangunic, N. and Granic, A, « Technology acceptance model: a literature review from 1986 to 2013", Univ Access Inf Soc, 14 ,Faculty of Science, University of Split, Split, Croatia, (2015), pp. 81-95.

[43]. Mazambani, L and Mutambara, E, "Predicting FinTech innovation adoption in South Africa: the case of cryptocurrency", African Journal of Economic and Management Studies, V. 11, N. 1, (2020), pp. 30-50.

[44]. Meera, A.K.M, « cryptocurrencies from islamic perspectives: the case of bitcoin", Bulletin of Monetary Economics and Banking, V. 20, N. 4, (2018), pp. 476-492.

[45]. Mendoza-Tello, J.C., Mora, H., Pujol-López, F.A. and Lytras, M.D, "Disruptive innovation of cryptocurrencies in consumer acceptance and trust", Information Systems and e-Business Management, (2019).

[46]. Metin, I. and Yakut, E, "consumer perceptions towards crypto currencies", conference proceeding, Fourth international scientific conference ERAZ, knowledge based sustainable economic development, Sofia, Bulgari, (2018).

[47]. Mitchell, V.W, "Understanding Consumers' Behavior: Can Perceived Risk Theory Help?", "Understanding Consumers' Behavior: Can Perceived Risk Theory Help?", Management Decision, V. 30, N. 3, (1992), pp. 25-34.

[48]. Mitchell, V.W. (1999) "Consumer perceived risk: conceptualizations and models", European Journal of Marketing, V. 33, N. 1/2, pp.163-195.

[49]. Mukabi, c. and Long Vu, N, "Cryptocurrency as a Payment Method in the Retail Industry An application of Diffusion of Innovation Theory (DOI) on the characteristics of Bitcoin: the case of Bitrefill", Bachelor Thesis in Business Administration, Jonkoping university, Jonkoping international business school, (2019).

[50]. Nadeem, M.A., Liu.Z., Pitafi, A., H., Younis, A. and Xu, Y. (2020)"Investigating the repurchase intention of Bitcoin: empirical evidence from China", Data Technologies and Applications, DOI 10.1108/DTA-10-2019-0182 .

[51]. Belouar, N. (2017) https://www.algerie360.com/300-000-transactions-se-font-en-crypto-monnaie-chaque-jour-en-algerie-care/ (accessed 20 march 2021).

[52]. Nurgun, K.Y. and Hulya, B.H, "determining the factors affecting investors' decision making process in cryptocurrency investments", press academia procedia, V 8, Istanbul finance congress, november1-2, Istanbul, Turkey, (2018).

[53]. Nurhisam, L, « bitcoin : islamic law perspective », Qudus International Journal of Islamic Studies, V. 5, N.2, (2017) pp. 85-100.

[54]. Nuryev, G., Spyridou, A., Yeh, S. and Achyldurdyeva, J, "Factors influencing the intention to use cryptocurrency payments: An examination of blockchain economy", Munich Personal RePEc Archive, No. 99159, (2018).

[55]. Pakrou, M. and Khademalizadeh, "Relationship between Perceived Value and the Intention of Using Bitcoin", journal of banking and commerce, v.21, N. 2, (2016).

[56]. Pelaez, A., Chen, C.W. and Chen, Y.X. (2017), « Effects of Perceived Risk on Intention to Purchase: A Meta-Analysis" Journal of Computer Information Systems, DOI: 10.1080/08874417.2017.1300514 .

[57]. Putra, I.G.N.A.P. and Darma, G.S, "Is Bitcoin Accepted in Indonesia ?", International Journal of Innovative Science and Research Technology, V. 4, N. 2, (2019), pp. 424-430.

[58]. Rabhi, M. (2017) https://www.djazairess.com/fr/liberte/381611 (accessed 20 march 2021.

[59]. Rahimi ,B., Nadri, H., Afshar, H.L. And Timpka, T, "A Systematic Review of the Technology Acceptance Model in Health Informatics", Applied Clinical Informatics, Vol. 9 No. 3, (2018), pp. 604-634.

[60]. Raynor de Best. (2022) https://www.statista.com/statistics/326707/bitcoin-price-index/ (accessed 16 april 2022)

[61]. Roos, C, "the motivation and factors driving crypto-currency adoption in SMEs", research project in master of business administration, Gordon institute of business science, university of Pretoria, (2015).

[62]. Suprihandari, M.D., Prasetyo, H.D. and Rahardjo, K.A., "Cryptocurrency: Take It Or Leave It", Journal of Economics and Finance, V. 11, N. 2, (2020), pp. 55-58.

[63]. Taherdoost,H, "a review of technology acceptance and adoptions models and theories", 11th international conference interdisciplinary engineering, Enter-eng, 2017, 5-6 october, Tirgu-Mures, Romania, procedia manufacturing, (2018), 22, pp. 960-967.

[64]. Troudi, H. and Bouyoucef, D, "predicting purchasing behavior of green food in Algerian context", euromed journal of business, V. 15, N. 1, (2020), pp. 1-21.

[65]. Wong, L.W., Leong, L.Y., Hew, J.J., Tan, G.W.H. and Ooi, K.B. (2020), "Time to seize the digital evolution: Adoption of blockchain in operations and supply chain management among Malaysian SMEs", International Journal of Information Management, https://doi.org/10.1016/j.ijinfomgt.2019.08.005.

[66]. Woodside, J.M., Augustine, F.K. and Giberson, W, "Blockchain Technology Adoption Status and Strategies", Journal of International Technology and Information Management, V. 26, N. 2, (2017), pp. 64-93.